American National Standard

ANSI/SAAMI Z299.3 – 2015

American National Standard Voluntary Industry Performance Standards for Pressure and Velocity of Centerfire Pistol and Revolver Ammunition for the Use of Commercial Manufacturers

Click here to jump to Main ANSI Manuals Index

American National Standards Institute
Headquarters
11 West 42nd Street, 13th Floor
New York, NY 10036
Tel: 212 642-4900 Fax: 212 398-0023

ANSI/SAAMI
Z299.3 – 2015

American National Standard
Voluntary Industry Performance Standards
for Pressure and Velocity
of Centerfire Pistol and Revolver Ammunition
for the Use of Commercial Manufacturers

Sponsor

Sporting Arms and Ammunition Manufacturers' Institute, Inc.

Members

Beretta USA Corporation
Broadsword Group LLC
Browning Arms Company
CCI/Speer Ammunition
Colt's Manufacturing Company LLC
COR-BON/Glaser LLC
Federal Cartridge Company
Fiocchi of America, Inc.
Glock
Hodgdon Powder Company
Hornady Manufacturing Company
Kahr Arms
Marlin Firearms Company
North American Arms, Inc.
O.F. Mossberg & Sons, Inc.
Olin Corporation/Winchester Division
Remington Arms Company, LLC
SIG SAUER, Inc.
Smith & Wesson Holding Corp.
St. Marks Powder, Inc.
Sturm, Ruger & Co., Inc.
Taurus Holdings, Inc.
Weatherby, Inc.

Associate Members:

Alliant Powder
Nosler, Inc
Ruag Ammotech USA, Inc.
Savage Arms, Inc.

Supporting Members:

Advanced Tactical Armament Concepts, LLC
Barnes Bullets, LLC
Black Hills Ammunition, Inc.
Doubletap Ammunition, Inc.
Kent Cartridge, America
Knight Rifles
LCT Pro Shop
One Shot, Inc.
ProGrade Ammo Group LLC
Southern Ballistic Research, LLC d/b/a SBR

Approved [TBD]
American National Standards Institute

Abstract In the interests of safety and interchangeability, this Standard provides pressure and velocity performance and dimensional characteristics for centerfire pistol and revolver sporting ammunition. Included are procedures and equipment for determining these criteria.

American National Standard

Approval of an American National Standard requires verification by ANSI that the requirements for due process, consensus, and other criteria for approval have been met by the standards developer.

Consensus is established when, in the judgment of the ANSI Board of Standards Review, substantial agreement has been reached by directly and materially affected interests. Substantial agreement means much more than a simple majority, but not necessarily unanimity. Consensus requires that all views and objections be considered, and that a concerted effort be made toward their resolution.

The use of American National Standards is completely voluntary; their existence does not in any respect preclude anyone, whether he has approved the standards or not, from manufacturing, marketing, purchasing, or using products, processes, or procedures not conforming to the standards.

The American National Standards Institute does not develop standards and will in no circumstances give an interpretation of any American National Standard. Moreover, no person shall have the right or authority to issue an interpretation of an American National Standard in the name of the American National Standards Institute. Requests for interpretation should be addressed to the secretariat or sponsor whose name appears on the title page of this standard.

CAUTION NOTICE: This American National Standard may be revised or withdrawn at any time. The procedures of the American National Standards Institute require that action be taken to reaffirm, revise, or withdraw this standard no later than five years from the date of approval. Purchasers of American National Standards may receive current information of all standards by calling or writing the American National Standards Institute.

Published by

Sporting Arms and Ammunition Manufacturers' Institute, Inc.
Flintlock Ridge Office Center
11 Mile Hill Road, Newtown, Connecticut 06470-2359

Copyright © 2015 by
Sporting Arms and Ammunition Manufacturers' Institute, Inc.
All rights Reserved.

No part of this publication may be reproduced in any form,
in an electronic retrieval system or otherwise, without
the prior written permission of the publisher.

Printed in the United States of America

(This foreword is not part of the American National Standard Z299.3)

Foreword

The development of this voluntary industry performance standard was initiated under the auspices of the Sporting Arms and Ammunition Manufacturers' Institute, Inc. (SAAMI). A Products Standards Task Force was established by the Institute in 1975 and charged with the drafting of this and other standards with their subsequent periodic revisions.

The material presented provides the commercial manufacturer of factory-loaded ammunition with pressure and velocity performance and dimensional characteristics. Included are procedures and equipment for determining these criteria. For the purpose of this standard a commercial manufacturer is defined as one who produces ammunition by fabricating component parts from raw materials as opposed to remanufacture with parts originally made by others.

This standard for Centerfire Pistol and Revolver Sporting Ammunition was first published in 1979 and periodically updated until this revision in 2015. Changes in the standard with each revision include minor adjustments of velocities, the addition of new load offerings, and updating of recommended equipment sources and the latest procedures for reporting reference ammunition assessments.

Suggestions for improvement of this standard will be welcome. They should be sent to: The Sporting Arms and Ammunition Manufacturers' Institute, Inc., Flintlock Ridge Office Center, 11 Mile Hill Road, Newtown, Connecticut 06470-2359.

Consensus for this standard was achieved by use of the Canvass Method.

The following individuals and organizations recognized as having an interest in the standardization of safety requirements for factory-loaded sporting ammunition were contacted prior to the approval of this standard. Inclusion in this list does not necessarily imply that the individual or organization concurred with the submittal of the standard to ANSI:

Aberdeen Proving Grounds – P. Donahue
Association of Firearm and Toolmark Examiners – L. Haag
Association of Firearm and Toolmark Examiners – J. Hamby, M.A.
Boone Ballistics, LLC – B. Boone
BPI Outdoors/Bergara Barrel and Custom Rifle Division – M. Hendricks
Bureau of Alcohol, Tobacco, Firearms and Explosives – E. Griffith
Department of Homeland Security; National Armory – L. Johnson
Federal Bureau of Investigation – A. S. Patterson
Federal Law Enforcement Training Center (FLETC) – C. Nester, Jr
Forensic Ammunition Service – G. Kass
H.P. White Laboratory – W. Mason
H-S Precision, Inc – T. Houghton
Independent Author, Editor and Firearms Manufacturer - R. Cofield
Independent Expert – K. Kees
Manson Precision Reamers; Division of Loon Lake Precision – D. Manson
Massachusetts Institute of Firearms Technology – C. Hildebrandt
National Institute of Standards & Technology – K. Rice
Natural Resources – Canada – R. Bowes
PCB Piezotronics – R. Metz
Royal Canadian Mounted Police – R. Poaps
Western Powders – D. Luhr

TABLE OF CONTENTS

SECTION I – CHARACTERISTICS

PAGE

Cartridges and Chambers
Full and Abbreviated Names 1
Velocity & Pressure
Velocity Data Interpretation 3
Factors Affecting Pressure Measurements 4
Explanation of Pressure Terminology 6
Explanation of Pressure Measuring Systems 8
Velocity & Pressure Data – Crusher 9
Velocity & Pressure Data – Transducer 17
Bullet Type Abbreviations 25
Primer
Primers and Primer Pockets 26
Cartridge and Chamber Drawings
9mm Luger 27
9mm Luger +P 27
9x18 Makarov 28
9x23 Winchester 29
10mm Automatic 30
221 Remington Fireball 31
25 Automatic 32
25 North American Arms 33
30 Luger (7.65mm) 34
32 Automatic 35
32 H&R Magnum 36
32 North American Arms 37
32 Short Colt 38
32 Smith & Wesson 39
32 Smith & Wesson Long 40
32 Smith & Wesson Long Wadcutter 41
327 Federal Magnum 42
356 TSW 43
357 Magnum 44
357 Sig 45
38 Automatic 49
38 Smith & Wesson 46
38 Special 47
38 Special Match 48
38 Special +P 47
38 Super Automatic +P 49
380 Automatic 50
40 Smith & Wesson 51
400 Cor-Bon 52
41 Remington Magnum 53
44 Remington Magnum 54
44 S&W Special 55

45 Automatic....56
45 Automatic Match....57
45 Automatic +P....56
45 Auto Rim....58
45 Colt....59
45 Glock Automatic Pistol....60
45 Winchester Magnum....61
454 Casull....62
460 S&W Magnum....63
475 Linebaugh....64
480 Ruger....65
50 Action Express....66
500 S&W Magnum....67
500 Special....68

Miscellaneous

Frangibility....69
Dummy Cartridge – Gun Functioning....70
Dummy Cartridge – Display....71
Blank Cartridge....72
Tolerance – Bullet Weight....73

SECTION II - PROCEDURES

Velocity and Pressure

Procedure: Velocity & Pressure Testing....74
Velocity & Pressure Barrels: Qualification....80
Velocity & Pressure Barrels: Mounting in Receivers....81
Procedure: Use of Piston Hole Gauges....82
Procedure: Piezoelectric Transducer Calibration....83
Transducer Calibration: Increments and Ranges....86
Transducer Calibration: Equipment Interconnection....88
Transducer Calibration: Least Square Line Computation....89
Firing Test: Equipment Interconnection....91

Reference Ammunition

Use....93
Secondary Reference Ammunition....95
New Lots....96
Identification Protocol....99
Periodic Assessment....100

Miscellaneous

Frangibility Testing....104

SECTION III – EQUIPMENT

Equipment: Velocity & Copper Crusher Pressure Testing....105
Equipment: Velocity & Conformal Piezoelectric Pressure Testing....107

Copper Crushers

Usage of Crusher Cylinders in Pressure Testing....109

Sample Tarage Table 110
Crusher Cylinders: Dimensions 111
Gas Checks
Equipment: 0.146" and 0.206" Gas Checks....113
Equipment: Gas Check Tools – Seating and Knockout....114
Equipment: Gas Check Wax....115
Pistons & Piston Holes
Equipment: Pistons and Piston Holes 116
Equipment: Piston Hole Gauges 119
Piston Oil – Piston and Gas Check 121
Headspace Gauges
Headspace Gauges 122
Reference Ammunition
Equipment: Reference Ammunition Supply....127
Equipment: Reference Ammunition Order Procedure....128
Miscellaneous
Equipment: Frangibility Testing....129
Supplier Contact Information 130
Equipment: Schematic Layout of Velocity Screens 131
Equipment: Universal Receiver Collar and Test Barrel 132
Universal Receiver Test Barrel: Installation of Pressure Transducers 134
Equipment: Transducer Calibration Fixture Plug with O-ring Seal 136
Transducer Location Criteria 137
Equipment: Vented Test Barrel – General....138
Standard V&P Test Barrels - General
Procedures for Dimensioning Chambers 139
Procedures for Measuring Barrel Length....140
Standard Velocity and Pressure Test Barrels
9mm Luger....141
9mm Luger +P 141
9x18 Makarov 142
9x23 Winchester 143
10mm Automatic 144
221 Remington Fireball 145
25 Automatic....146
25 North American Arms....147
30 Luger (7.65mm) 148
32 Automatic....149
32 H&R Magnum 150
32 North American Arms....151
32 Short Colt....152
32 Smith & Wesson 153
32 Smith & Wesson Long....154
32 Smith & Wesson Long Wadcutter 154
327 Federal Magnum 155
356 TSW 156
357 Magnum 157
357 Sig 158
38 Automatic....159

38 Smith & Wesson 160
38 Special 161
38 Special Match 161
38 Special +P 161
38 Super Automatic +P 159
380 Automatic 162
40 Smith & Wesson 163
400 Cor-Bon 164
41 Remington Magnum 165
44 Remington Magnum 166
44 S&W Special 167
45 Automatic 168
45 Automatic Match 168
45 Automatic +P 168
45 Auto Rim 169
45 Colt 170
45 Glock Automatic Pistol 171
45 Winchester Magnum 172
454 Casull 173
460 S&W Magnum 174
475 Linebaugh 175
480 Ruger 176
50 Action Express 177
500 S&W Magnum 178
500 Special 179

SECTION IV – DEFINITIVE PROOF LOADS

Definition and Purpose 180
Proof Pressure Data Interpretation 181
Proof Pressure Data – Crusher 183
Proof Pressure Data – Transducer 185
Proof Load Supply 187
Proof Cartridge Identification 188
Definitive Proof Package Identification 189

CARTRIDGES AND CHAMBERS
FULL AND ABBREVIATED NAMES

The following list presents the recommended full names and abbreviated names of the centerfire pistol and revolver cartridges and chambers currently supplied for various types of firearms.

These full or abbreviated names should be used on cartridge headstamps and on firearm markings to properly identify the caliber.

ORDER OF LISTING

Lists of centerfire pistol and revolver cartridges are arranged according to the following rules:

1) All Metric cartridges
    a) First in ascending numerical order of approximate caliber designation,
    b) Then in alphabetical order.

2) Followed by American cartridges
    a) First in ascending numerical order of approximate caliber designation,
    b) Then alphabetical order.

3) Within each of the above groups, cartridges are arranged in order of:
    a) 2-digit numbers,
    b) 2-digit numbers and a hyphen followed by more numbers,
    c) 3-digit numbers.

For lists that present both cartridge name and several bullet weights, list in ascending numerical order of bullet weights.

Active Cartridges and Chambers

Full Name	Abbreviated Name
9mm Luger	9mm Luger
9mm Luger +P	9mm Luger +P*
9x18 Makarov	9x18 Mak
9x23 Winchester	9x23 Win
10mm Automatic	10mm Auto
221 Remington Fireball	221 Rem Fireball
25 Automatic	25 Auto
25 North American Arms	25 NAA
30 Luger (7.65mm)	30 Luger (7.65mm)
32 Automatic	32 Auto
32 H&R Magnum	32 H&R Mag
32 North American Arms	32 NAA
32 Short Colt	32 SC

* This ammunition is loaded to a higher pressure, as indicated by the +P marking on the case headstamp, to achieve higher velocity. Use only in firearms especially designed for this cartridge and so recommended by the manufacturer.

32 Smith & Wesson ..... 32 S&W
32 Smith & Wesson Long..... 32 S&WL

327 Federal Magnum ..... 327 Fed Mag

356 TSW ..... 356 TSW

357 Magnum ..... 357 Mag
357 Sig ..... 357 Sig

38 Automatic..... 38 Auto
38 Smith & Wesson ..... 38 S&W
38 Special..... 38 Spl
38 Special Match..... 38 Spl Match
38 Special +P ..... 38 Spl +P*
38 Super Automatic +P..... 38 Super Auto +P*
380 Automatic..... 380 Auto

40 Smith & Wesson ..... 40 S&W
400 Cor-Bon..... 400 CB

41 Remington Magnum ..... 41 Rem Mag

44 Remington Magnum ..... 44 Rem Mag
44 S&W Special..... 44 S&W Spl

45 Automatic..... 45 Auto
45 Automatic Match ..... 45 Auto Match
45 Automatic +P ..... 45 Auto +P*
45 Auto Rim..... 45 Auto Rim
45 Colt..... 45 Colt
45 Glock Automatic Pistol..... 45 GAP
45 Winchester Magnum..... 45 Win Mag
454 Casull ..... 454 Casull

460 S&W Magnum..... 460 S&W Mag

475 Linebaugh ..... 475 Linebaugh

480 Ruger..... 480 Ruger

50 Action Express..... 50 AE
500 S&W Magnum..... 500 S&W Mag
500 Special..... 500 Spl

* This ammunition is loaded to a higher pressure, as indicated by the +P marking on the case headstamp, to achieve higher velocity. Use only in firearms especially designed for this cartridge and so recommended by the manufacturer.

VELOCITY DATA INTERPRETATION

Velocity recommendations are stated on the basis of a nominal lot mean velocity as measured using equipment in accordance with the requirements of Section III and the procedures detailed in Section II. Due to the fact that sporting firearms for general distribution are typically manufactured to dimensional tolerances greater than those specified for test barrels, there should be no expectation that these velocities can be duplicated from any test utilizing firearms. This situation is further confounded by discrepancies in barrel length. Furthermore, once ammunition has left the control of the manufacturer, storage conditions outside those recommended by the manufacturer may cause variations in the velocity as measured using test equipment and procedures which conform to the requirements of this Standard.

The values presented on pages 9 through 24 are recommended values for the use of ammunition producers at the time of manufacture. It is the responsibility of the manufacturer to establish sample sizes, sampling frequencies, and tolerances to ensure the performance of the ammunition obtained by the ultimate user meets all applicable safety and functional standards. Of particular importance in establishing velocity tolerances is the understanding that velocities significantly higher than the nominal lot mean can cause actual maximum range performance to exceed expected values.

Ammunition tested subsequent to manufacture using equipment and procedures conforming to these guidelines can be expected to produce velocities within a tolerance of ±90 fps of the tabulated values.

FACTORS AFFECTING PRESSURE MEASUREMENTS

Two principal methods of measuring centerfire pistol and revolver pressures are recognized: the copper crusher method and the piezoelectric transducer method. One or the other may be used or they may be used simultaneously.

There are three principal factors affecting pressure measurements. These are instrumentation, ammunition and procedure. The following lists present the items in each category that may cause difficulties in testing carried out with the two methods.

I. FACTORS IN COPPER CRUSHER TESTING

INSTRUMENTATION

1. Condition of test barrel (whether minimum or maximum bore, chamber size and headspace, amount of erosion at throat and bore).
2. Diameter of piston and piston hole.
3. Fit of piston in piston hole.
4. Location of piston hole.
5. Tightness of barrel mounting in Universal Receiver, if used.
6. Shape, size and protrusion of firing pin beyond breech face.
7. Force of firing pin blow.
8. Size, material and characteristics of the pressure-sensitive element of the gauge (copper crusher cylinders).
9. Type, size and condition of gas check.
10. Type of piston and gas check lubricant.
11. Quality and tolerance of piston hole gauges and headspace gauges.
12. Quality of crusher measuring instrument.

AMMUNITION

1. Condition of cartridge.
2. Position of powder in cartridge case.
3. Temperature of ammunition.

PROCEDURE

1. Failure to mount pressure barrel properly in Universal Receiver or other test action to assure minimum headspace.
2. Failure to rotate cartridge and close breech carefully to assure proper powder positioning.
3. Failure to wipe piston ends, crusher and setscrew face to remove excess oil.
4. Failure to center crusher cylinder on piston and properly adjust setscrew.
5. Failure to fire warming shots.
6. Overheating barrel by excessive rate of fire.
7. Failure to clean bore and control metal fouling.
8. Failure to clear barrel of brass disk blanked from the case wall and gas check from previous shot.

II. FACTORS IN PIEZOELECTRIC TRANSDUCER TESTING

INSTRUMENTATION

1. Condition of test barrel (whether minimum or maximum bore, chamber size and headspace, amount of erosion at throat and bore).
2. Fit of transducer in barrel.
3. Location of transducer.
4. Tightness of barrel mounting in Universal Receiver, if used.
5. Shape, size and protrusion of firing pin beyond breech face.
6. Force of firing pin blow.
7. Characteristics of the transducer.
8. Quality of the transducer.
9. Quality of the read-out system.

AMMUNITION

1. Condition of cartridge.
2. Position of powder in cartridge case.
3. Temperature of ammunition.

PROCEDURE

1. Failure to mount pressure barrel properly in Universal Receiver or other test action to assure minimum headspace.
2. Failure to rotate cartridge and close breech carefully to assure proper powder positioning.
3. Failure to fire warming shots.
4. Overheating barrel by excessive rate of fire.
5. Failure to clean bore and control metal fouling.
6. Failure to protect transducer against contamination, such as oil or water.
7. Transducer calibration.
8. Read-out system calibration.

EXPLANATION OF PRESSURE TERMINOLOGY

The SAAMI Pressure data outlined in this section is based on a Maximum Average Pressure for each cartridge and a Coefficient of Variation of 5%. The Coefficient of Variation (CV) of 5% was based on the CV that exists for the 40,000 psi pressure level and is calculated by dividing the population standard deviation (σ = 2,000 psi) by the Maximum Average Pressure (MAP = 40,000 psi) which equals 0.05 (5%). All other pressure terminology is derived directly from these two terms.

SAAMI recognizes two pressure-measuring systems. The preferred system is the piezoelectric transducer system with the transducer flush-mounted in the chamber of the test barrel. Pressure developed by the burning propellant exerts force on the transducer through the cartridge case wall causing the transducer to deflect, creating a measurable electric charge. Pressures measured with this system are expressed in units of "pounds per square inch" (abbreviated psi).

The second, older system employs a copper crusher cylinder which is compressed by a piston fitted to a piston hole into the chamber of the test barrel. Pressure generated by the burning propellant acts on the base of the piston forcing the piston to move, thereby permanently compressing the copper cylinder. Pressures measured by this system are expressed in "Copper Units of Pressure" (abbreviated as "CUP").

Throughout the following text the pressure is expressed in terms of "pounds per square inch" ("psi") however, it should be understood that the same procedures apply to pressures expressed in "Copper Units of Pressure" (CUP).

Maximum Average Pressure - is the recommended maximum pressure level for loading commercial sporting ammunition.

Standard Deviation (σ) - The Standard Deviation for each Maximum Average Pressure level is based on a Coefficient of Variation of 5%. This 5% Coefficient of Variation is maintained throughout the SAAMI pressure spectrum providing a realistic Standard Deviation for each pressure level. To obtain the Standard Deviation for a particular MAP, multiply the MAP by 0.05 (i.e., 40,000 psi x 0.05 = 2,000 psi).

Standard Error $(\sigma_{\bar{x}})$ - The standard error is calculated by dividing the Standard Deviation (population S. D. = σ) by the square root of the sample size $\sigma_{\bar{x}} = \sigma/\sqrt{n}$

Maximum Probable Lot Mean (MPLM) - The MPLM is calculated by adding two standard errors to the Maximum Average Pressure in order to assure there is a 97.5% probability that the Maximum Probable Lot Mean pressure is not exceeded. See Figure 1.

The SAAMI pressures are calculated based on a sample size of ten (10). The Maximum Probable Lot Mean represents the midpoint of the upper service pressure distribution. See Figure 1. For example, if the Maximum Average Pressure is 40,000 psi, the Maximum Probable Lot Mean (MPLM) is calculated as follows:

MPLM = Maximum Average Pressure + 2 standard errors

MPLM = 40,000 psi + [(40,000 psi x 0.05)/$\sqrt{10}$] x 2

MPLM = 40,000 psi + (633 psi x 2) = 40,000 + 1266 psi = 41,266 psi rounded to 41,300 psi

Maximum Probable Sample Mean (MPSM) - is the maximum expected average pressure that may be observed in the testing of product subsequent to its manufacture and is not intended for use as a loading control point. The Maximum Probable Sample Mean is positioned three (3) standard errors above the Maximum Probable Lot Mean i.e., MPLM + $3\sigma_{\bar{x}}$. See Figure 1. The Maximum Probable Sample Mean defined here is the value previously referred to in the ANSI/SAAMI Standards as the Maximum Product Average.

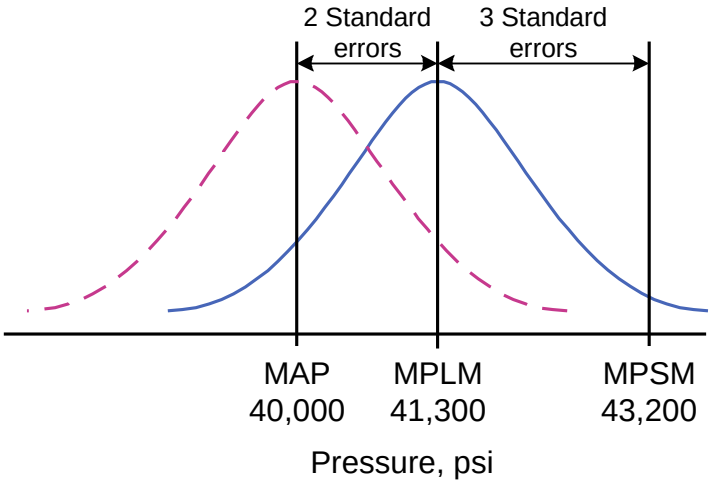

Figure 1

Maximum Extreme Variation - The maximum allowable sample E.V. (Extreme Variation or Range) is a statistic derived from the knowledge of the population Standard Deviation. Applying table figures from the Relative Range Tables (Biometrika Tables for Statisticians) we calculate the Maximum E.V. or Range as (population σ) x 5.16 (table constant for sample of 10 at 99.0% confidence level) i.e., 2,000 psi x 5.16 = 10,320 psi rounded down to 10,300 psi.

EXPLANATION OF PRESSURE MEASURING SYSTEMS

The two SAAMI recognized pressure-measuring systems for centerfire pistol and revolver cartridges are the copper crusher system and the piezoelectric transducer system.

A brief explanation of these two systems follows:

COPPER CRUSHER SYSTEM

This system employs a copper crusher cylinder that is compressed by a piston fitted to a piston hole into the chamber of the test barrel. The pressure developed by the gases from the burning propellant acts through the piston hole, allowing the gases to force the piston upward, and thereby permanently compressing the copper crusher cylinder. The Sporting Arms and Ammunition Manufacturers' Institute has adopted the pressure units designation of "Copper Units of Pressure" (abbreviated CUP) for this system. This designation applies only to values obtained using the particular crushers, tarage tables and methods outlined in this Standard.

PIEZOELECTRIC TRANSDUCER SYSTEM

This system employs a piezoelectric transducer flush mounted in the chamber of the test barrel. Pressure developed by the gases from the burning propellant exerts force on the transducer through the cartridge case wall causing the transducer to deflect, creating a measurable electric charge. This electrical charge is converted into a reading of pressure.

The Sporting Arms and Ammunition Manufacturers' Institute has adopted the pressure units designation of "pounds per square inch" (abbreviated psi) for this system. This designation applies to values obtained with transducers and methods as outlined in this Standard.

VELOCITY AND PRESSURE:
VELOCITY & PRESSURE DATA – CRUSHER

(N/E = Not Established)

Cartridge	Bullet Weight (gr.)	Velocity (fps) Nominal Mean Instrumental @ 15' Vented Bbl[2].	Velocity (fps) Nominal Mean Instrumental @ 15' Test Bbl.	Copper Units of Pressure (Solid test barrel, CUP/100)[1] Maximum Average Pressure (MAP)	Maximum Probable Lot Mean (MPLM)	Maximum Probable Sample Mean (MPSM)
9mm Luger	88	[3]	1,500	330	340	356
	95		1,330			
	100		1,195			
	105		1,200			
	115		1,135			
			1,210			
	124		1,090			
			1,130			
	135		1,060			
	147		985			
9mm Luger +P	90	[3]	1,375	N/E	N/E	N/E
	101		1,225			
	115		1,100			
			1,235			
	124		1,180			
9x18 Makarov	90	[3]	990	N/E	N/E	N/E
	95		1,000			
9x23 Winchester	124	[3]	1,460	N/E	N/E	N/E
	125		1,435			
10mm Automatic	155	[3]	1,080	N/E	N/E	N/E
			1,115			
			1,410			
	170		1,320			
	175		1,275			
	200		985			
			1,150			
221 Remington Fireball	50	[3]	2,520	520	536	561

[1] Based on sample size η=10.
[2] Vented barrel velocities are provided for information only. Vented test barrels are used for the establishment of catalog velocity values for cartridges normally chambered in revolvers.
[3] Revolvers not normally chambered for this cartridge.

VELOCITY AND PRESSURE:
VELOCITY & PRESSURE DATA – CRUSHER (Cont'd)

(N/E = Not Established)

Cartridge	Bullet Weight (gr.)	Velocity (fps) Nominal Mean Instrumental @ 15' Vented Bbl.[2]	Velocity (fps) Nominal Mean Instrumental @ 15' Test Bbl.	Copper Units of Pressure (Solid test barrel, CUP/100)[1] Maximum Average Pressure (MAP)	Maximum Probable Lot Mean (MPLM)	Maximum Probable Sample Mean (MPSM)
25 Automatic	35	[3]	900	180	186	195
	45		805			
	50		755			
25 North American Arms	35	[3]	1,200	N/E	N/E	N/E
30 Luger (7.65mm)	93	[3]	1,190	280	289	302
32 Automatic	60	[3]	970	150	155	162
	65		1,000			
	71		900			
32 H&R Magnum	85	N/E	1,120	210	217	227
	95	N/E	1,020			
32 North American Arms	60	N/E	1,220	N/E	N/E	N/E
32 Short Colt	80	N/E	700	130	134	140
32 Smith &Wesson	85-88	N/E	700	120	124	130
32 Smith &Wesson Long	98	N/E	775	120	124	130
327 Federal Magnum	115	N/E	1,535	N/E	N/E	N/E
356 TSW	147	[3]	1,240	N/E	N/E	N/E

[1] Based on sample size η=10.
[2] Vented barrel velocities are provided for information only. Vented test barrels are used for the establishment of catalog velocity values for cartridges normally chambered in revolvers.
[3] Revolvers not normally chambered for this cartridge.

VELOCITY AND PRESSURE:
VELOCITY & PRESSURE DATA – CRUSHER (Cont'd)

(N/E = Not Established)

Cartridge	Bullet Weight (gr.)	Velocity (fps) Nominal Mean Instrumental @ 15' Vented Bbl.[2]	Velocity (fps) Nominal Mean Instrumental @ 15' Test Bbl.	Copper Units of Pressure (Solid test barrel, CUP/100)[1] Maximum Average Pressure (MAP)	Maximum Probable Lot Mean (MPLM)	Maximum Probable Sample Mean (MPSM)
357 Magnum	101	1,235	1,650	450	464	485
	110	1,270	1,650			
	125	1,220	1,500			
		1,300	1,600			
		N/E	1,750			
		1,425	1,875			
	130	1,300	N/E			
	140	N/E	1,560			
		N/E	1,625			
		1,330	1,750			
	145	1,270	1,670			
	158	1,220	1,545			
		1,220	1,600			
	165	N/E	1,510			
	180	1,000	1,400			
357 Sig	100	[3]	1,450	N/E	N/E	N/E
	104		1,345			
	105		1,350			
	124		1,350			
	125		1,350			
	147		1,225			
	150		1,130			

[1] Based on sample size η=10.
[2] Vented barrel velocities are provided for information only. Vented test barrels are used for the establishment of catalog velocity values for cartridges normally chambered in revolvers.
[3] Revolvers not normally chambered for this cartridge.

VELOCITY AND PRESSURE:
VELOCITY & PRESSURE DATA – CRUSHER (Cont'd)

(N/E = Not Established)

Cartridge	Bullet Weight (gr.)	Velocity (fps) Nominal Mean Instrumental @ 15' Vented Bbl.[2]	Velocity (fps) Nominal Mean Instrumental @ 15' Test Bbl.	Copper Units of Pressure (Solid test barrel, CUP/100)[1] Maximum Average Pressure (MAP)	Maximum Probable Lot Mean (MPLM)	Maximum Probable Sample Mean (MPSM)
38 Automatic	130	[3]	1,035	230	237	248
38 Smith &Wesson	145-146	N/E	680	130	134	140
38 Special	100	950	N/E	170	175	183
	110	1,000	N/E			
		N/E	975			
		945	1,150			
	125	N/E	950			
		N/E	1,000			
		N/E	1,050			
	130	N/E	775			
		775	950			
		895	1,040			
	150	N/E	900			
	158	750	900			
	200	630	780			
38 Special Match[4]	148	700	800	170	175	183
	158	750	900			
38 Special +P	95	1,080	1,330	200	206	215
		1,155	1,420			
	101	945	1,120			
	110	980	1,205			
	125	965	1,135			
	130	925	1,150			
	147	855	985			
	150	840	1,050			
	158	880	1,050			

[1] Based on sample size η=10.
[2] Vented barrel velocities are provided for information only. Vented test barrels are used for the establishment of catalog velocity values for cartridges normally chambered in revolvers.
[3] Revolvers not normally chambered for this cartridge.
[4] The velocity figures listed for Match items are nominal values; optimum accuracy may require a velocity different from the nominal values.

VELOCITY AND PRESSURE:
VELOCITY & PRESSURE DATA – CRUSHER (Cont'd)

(N/E = Not Established)

Cartridge	Bullet Weight (gr.)	Velocity (fps) Nominal Mean Instrumental @ 15' Vented Bbl.[2]	Velocity (fps) Nominal Mean Instrumental @ 15' Test Bbl.	Copper Units of Pressure (Solid test barrel, CUP/100)[1] Maximum Average Pressure (MAP)	Maximum Probable Lot Mean (MPLM)	Maximum Probable Sample Mean (MPSM)
38 Super Automatic +P	115	[3]	1,280	330	340	356
	125		1,230			
	130		1,200			
380 Automatic	65	[3]	1,050	170	175	183
	80		980			
	85		990			
	88-90		980			
	95		945			
			990			
	100		910			
40 Smith & Wesson	125	[3]	1,300	N/E	N/E	N/E
	135		1,150			
			1,185			
	140		1,050			
			1,155			
	141		1,135			
	155		1,115			
			1,195			
	165		1,040			
			1,135			
	180		985			
400 Cor-Bon	135	[3]	1,450	N/E	N/E	N/E
	150		1,350			
	155		1,200			
	160		1,000			
	165		1,300			
41 Remington Magnum	170	1,400	1,800	400	413	432
	175	1,250	1,490			
	180	N/E	1,550			
		N/E	1,615			
	210	955	1,125			
		1,280	1,585			

[1] Based on sample size η=10.
[2] Vented barrel velocities are provided for information only. Vented test barrels are used for the establishment of catalog velocity values for cartridges normally chambered in revolvers.
[3] Revolvers not normally chambered for this cartridge.

VELOCITY AND PRESSURE:
VELOCITY & PRESSURE DATA – CRUSHER (Cont'd)

(N/E = Not Established)

Cartridge	Bullet Weight (gr.)	Velocity (fps) Nominal Mean Instrumental @ 15' Vented Bbl.[2]	Velocity (fps) Nominal Mean Instrumental @ 15' Test Bbl.	Copper Units of Pressure (Solid test barrel, CUP/100)[1] Maximum Average Pressure (MAP)	Maximum Probable Lot Mean (MPLM)	Maximum Probable Sample Mean (MPSM)
44 Remington Magnum	180	1,600	1,800	400	413	432
	210	1,250	1,425			
	220	N/E	1,580			
	225	N/E	1,275			
	240	995	1,175			
		1,150	1,500			
		1,170	1,600			
		1,335	1,600			
	250	N/E	1,150			
		1,150	1,475			
		N/E	1,520			
	275	1,185	1,335			
	300	N/E	1,200			
44 S&W Special	200	N/E	900	140	144	151
		N/E	1,025			
	240	750	800			
	246	N/E	800			

[1] Based on sample size η=10.
[2] Vented barrel velocities are provided for information only. Vented test barrels are used for the establishment of catalog velocity values for cartridges normally chambered in revolvers.

VELOCITY AND PRESSURE:
VELOCITY & PRESSURE DATA – CRUSHER (Cont'd)

(N/E = Not Established)

Cartridge	Bullet Weight (gr.)	Velocity (fps) Nominal Mean Instrumental @ 15' Vented Bbl.[2]	Velocity (fps) Nominal Mean Instrumental @ 15' Test Bbl.	Copper Units of Pressure (Solid test barrel, CUP/100)[1] Maximum Average Pressure (MAP)	Maximum Probable Lot Mean (MPLM)	Maximum Probable Sample Mean (MPSM)
45 Automatic	120	[3]	1,200	180	186	195
	155		1,125			
	165		1,065			
	170		1,050			
	175		1,020			
	185		915			
			995			
	230		830			
			870			
			915			
45 Automatic Match[3]	185	[3]	765	180	186	195
45 Automatic +P	185	[3]	990	N/E	N/E	N/E
			1,130			
	230		975			
45 Auto Rim	230	[3]	825	150	155	162
45 Colt	200		1,120	140	144	151
	225		915			
			950			
	250		750			
	250-255		900			
45 Glock Automatic Pistol	175	[3]	995	N/E	N/E	N/E
	185		995			
			1,090			
	200		1,020			
	230		830			
			870			
45 Winchester Magnum	230	N/E	1,380	400	413	432
	260		1,200			

[1] Based on sample size η=10.
[2] Vented barrel velocities are provided for information only. Vented test barrels are used for the establishment of catalog velocity values for cartridges normally chambered in revolvers.
[3] Revolvers not normally chambered for this cartridge.
[4] The velocity figures listed for Match items are nominal values; optimum accuracy may require a velocity different from the nominal values.

VELOCITY AND PRESSURE:
VELOCITY & PRESSURE DATA – CRUSHER (Cont'd)

(N/E = Not Established)

Cartridge	Bullet Weight (gr.)	Velocity (fps) Nominal Mean Instrumental @ 15' Vented Bbl.[2]	Velocity (fps) Nominal Mean Instrumental @ 15' Test Bbl.	Copper Units of Pressure (Solid test barrel, CUP/100)[1] Maximum Average Pressure (MAP)	Maximum Probable Lot Mean (MPLM)	Maximum Probable Sample Mean (MPSM)
454 Casull	250	N/E	1,420	N/E	N/E	N/E
			1,775			
			2,000			
	260	↓	2,000			
	300	1,625	1,825			
460 S&W Magnum	200	N/E	2,540	N/E	N/E	N/E
	250	↓	1,650			
	260		2,150			
475 Linebaugh	400	1,300	1,400	N/E	N/E	N/E
480 Ruger	325	1,350	1,425	N/E	N/E	N/E
50 Action Express	325	[3]	1,400	N/E	N/E	N/E
500 S&W Magnum	275	N/E	1,620	N/E	N/E	N/E
	300	↓	2,050			
	350		1,400			
			1,800			
	400		1,800			
	440		1,625			
500 Special	350	N/E	1,375	N/E	N/E	N/E

[1] Based on sample size η=10.
[2] Vented barrel velocities are provided for information only. Vented test barrels are used for the establishment of catalog velocity values for cartridges normally chambered in revolvers.
[3] Revolvers not normally chambered for this cartridge.

VELOCITY AND PRESSURE:
VELOCITY & PRESSURE DATA – TRANSDUCER

(N/E = Not Established)

Cartridge	Bullet Weight (gr.)	Velocity (fps) Nominal Mean Instrumental @ 15' Vented Bbl.[2]	Velocity (fps) Nominal Mean Instrumental @ 15' Test Bbl.	Transducer Pressure (Solid test barrel, psi/100)[1] Maximum Average Pressure (MAP)	Maximum Probable Lot Mean (MPLM)	Maximum Probable Sample Mean (MPSM)
9mm Luger	88	[3]	1,500	350	361	378
	95		1,330			
	100		1,195			
	105		1,200			
	115		1,135			
			1,210			
	124		1,090			
			1,130			
	135		1,060			
	147		985			
9mm Luger +P	90	[3]	1,375	385	397	415
	101		1,220			
	115		1,100			
			1,235			
	124		1,180			
9x18 Makarov	90	[3]	990	241	249	260
	95		1,000			
9x23 Winchester	124	[3]	1,460	550	567	593
	125		1,435			
10mm Automatic	155	[3]	1,115	375	387	405
			1,180			
			1,410			
	170		1,320			
	175		1,275			
	200		985			
			1,150			
221 Remington Fireball	50	[3]	2,520	600	619	647

[1] Based on sample size η=10.
[2] Vented barrel velocities are provided for information only. Vented test barrels are used for the establishment of catalog velocity values for cartridges normally chambered in revolvers.
[3] Revolvers not normally chambered for this cartridge.

VELOCITY AND PRESSURE:
VELOCITY & PRESSURE DATA – TRANSDUCER (Cont'd)

(N/E = Not Established)

Cartridge	Bullet Weight (gr.)	Velocity (fps) Nominal Mean Instrumental @ 15' Vented Bbl.[2]	Velocity (fps) Nominal Mean Instrumental @ 15' Test Bbl.	Transducer Pressure (Solid test barrel, psi/100)[1] Maximum Average Pressure (MAP)	Maximum Probable Lot Mean (MPLM)	Maximum Probable Sample Mean (MPSM)
25 Automatic	35	[3]	900	250	258	270
	45		805			
	50		755			
25 North American Arms	35	[3]	1,200	239	247	258
30 Luger (7.65mm)	93	[3]	1,190	280	289	302
32 Automatic	60	[3]	970	205	211	221
	65		1,000			
	71		900			
32 H&R Magnum	85	N/E	1,120	N/E	N/E	N/E
	95	N/E	1,020			
32 North American Arms	60	N/E	1,220	239	247	258
32 Short Colt	80	N/E	750	175	181	189
32 Smith &Wesson	85-88	N/E	700	170	175	183
32 Smith &Wesson Long	98	N/E	775	150	155	162
327 Federal Magnum	115	N/E	1,535	450	464	485
356 TSW	147	[3]	1,240	500	516	540

[1] Based on sample size η=10.
[2] Vented barrel velocities are provided for information only. Vented test barrels are used for the establishment of catalog velocity values for cartridges normally chambered in revolvers.
[3] Revolvers not normally chambered for this cartridge.

VELOCITY AND PRESSURE:
VELOCITY & PRESSURE DATA – TRANSDUCER (Cont'd)

(N/E = Not Established)

Cartridge	Bullet Weight (gr.)	Velocity (fps) Nominal Mean Instrumental @ 15' Vented Bbl.[2]	Velocity (fps) Nominal Mean Instrumental @ 15' Test Bbl.	Transducer Pressure (Solid test barrel, psi/100)[1] Maximum Average Pressure (MAP)	Maximum Probable Lot Mean (MPLM)	Maximum Probable Sample Mean (MPSM)
357 Magnum	101	1,235	1,650	350	361	378
	110	1,270	1,650			
	125	1,220	1,500			
		1,300	1,600			
		N/E	1,750			
		1,425	1,875			
	130	1,300	N/E			
	140	N/E	1,560			
		N/E	1,625			
		1,330	1,750			
	145	1,270	1,670			
	158	1,220	1,545			
		1,220	1,600			
	165	N/E	1,510			
	180	1,000	1,400			
357 Sig	100	[3]	1,450	400	413	432
	104		1,345			
	105		1,350			
	124		1,350			
	125		1,350			
	147		1,225			
	150		1,130			

[1] Based on sample size η=10.
[2] Vented barrel velocities are provided for information only. Vented test barrels are used for the establishment of catalog velocity values for cartridges normally chambered in revolvers.
[3] Revolvers not normally chambered for this cartridge.

VELOCITY AND PRESSURE:
VELOCITY & PRESSURE DATA – TRANSDUCER (Cont'd)

(N/E = Not Established)

Cartridge	Bullet Weight (gr.)	Velocity (fps) Nominal Mean Instrumental @ 15' Vented Bbl.[2]	Velocity (fps) Nominal Mean Instrumental @ 15' Test Bbl.	Transducer Pressure (Solid test barrel, psi/100)[1] Maximum Average Pressure (MAP)	Maximum Probable Lot Mean (MPLM)	Maximum Probable Sample Mean (MPSM)
38 Automatic	130	[3]	1,035	265	273	286
38 Smith &Wesson	145-146	N/E	680	145	150	157
38 Special	100	950	N/E	170	175	183
	110	1,000	N/E			
		N/E	975			
		945	1,150			
	125	N/E	950			
		N/E	1,000			
		N/E	1,050			
	130	N/E	775			
		775	950			
		895	1,040			
	150	N/E	900			
	158	750	900			
	200	630	780			
38 Special Match[4]	148	700	800	170	175	183
	158	750	900			
38 Special +P	95	1,080	1,330	200	206	215
		1,155	1,420			
	101	945	1,120			
	110	980	1,205			
	125	965	1,135			
	130	925	1,150			
	147	855	985			
	150	840	1,050			
	158	880	1,050			

[1] Based on sample size η=10.
[2] Vented barrel velocities are provided for information only. Vented test barrels are used for the establishment of catalog velocity values for cartridges normally chambered in revolvers.
[3] Revolvers not normally chambered for this cartridge.
[4] The velocity figures listed for Match items are nominal values; optimum accuracy may require a velocity different from the nominal values.

VELOCITY AND PRESSURE:
VELOCITY & PRESSURE DATA – TRANSDUCER (Cont'd)

(N/E = Not Established)

Cartridge	Bullet Weight (gr.)	Velocity (fps) Nominal Mean Instrumental @ 15' Vented Bbl.[2]	Velocity (fps) Nominal Mean Instrumental @ 15' Test Bbl.	Transducer Pressure (Solid test barrel, psi/100)[1] Maximum Average Pressure (MAP)	Maximum Probable Lot Mean (MPLM)	Maximum Probable Sample Mean (MPSM)
38 Super Automatic +P	115	[3]	1,280	365	377	394
	125		1,230			
	130		1,200			
380 Automatic	65	[3]	1,050	215	222	232
	80		980			
	85		990			
	88-90		980			
	95		945			
			990			
	100		910			
40 Smith & Wesson	125	[3]	1,300	350	361	378
	135		1,150			
			1,185			
	140		1,050			
			1,155			
	141		1,135			
	155		1,115			
			1,195			
	165		1,040			
			1,135			
	180		985			
400 Cor-Bon	135	[3]	1,450	350	361	378
	150		1,350			
	155		1,200			
	160		1,000			
	165		1,300			
41 Remington Magnum	170	1,400	1,800	360	371	388
	175	1,250	1,490			
	180	N/E	1,550			
		N/E	1,615			
	210	955	1,125			
		1,280	1,585			

[1] Based on sample size η=10.
[2] Vented barrel velocities are provided for information only. Vented test barrels are used for the establishment of catalog velocity values for cartridges normally chambered in revolvers.
[3] Revolvers not normally chambered for this cartridge.

VELOCITY AND PRESSURE:
VELOCITY & PRESSURE DATA – TRANSDUCER (Cont'd)

(N/E = Not Established)

Cartridge	Bullet Weight (gr.)	Velocity (fps) Nominal Mean Instrumental @ 15' Vented Bbl.[2]	Velocity (fps) Nominal Mean Instrumental @ 15' Test Bbl.	Transducer Pressure (Solid test barrel, psi/100)[1] Maximum Average Pressure (MAP)	Maximum Probable Lot Mean (MPLM)	Maximum Probable Sample Mean (MPSM)
44 Remington Magnum	180	1,600	1,800	360	371	388
	210	1,250	1,425			
	220	N/E	1,580			
	225	N/E	1,275			
	240	995	1,175			
		1,150	1,500			
		1,170	1,600			
		1,335	1,600			
	250	N/E	1,150			
		1,150	1,475			
		N/E	1,520			
	275	1,185	1,335			
	300	N/E	1,200			
44 S&W Special	200	N/E	900	155	160	167
		N/E	1,025			
	240	750	800			
	246	N/E	800			

[1] Based on sample size η=10.
[2] Vented barrel velocities are provided for information only. Vented test barrels are used for the establishment of catalog velocity values for cartridges normally chambered in revolvers.

VELOCITY AND PRESSURE:
VELOCITY & PRESSURE DATA – TRANSDUCER (Cont'd)

(N/E = Not Established)

Cartridge	Bullet Weight (gr.)	Velocity (fps) Nominal Mean Instrumental @ 15' Vented Bbl.[2]	Velocity (fps) Nominal Mean Instrumental @ 15' Test Bbl.	Transducer Pressure (Solid test barrel, psi/100)[1] Maximum Average Pressure (MAP)	Maximum Probable Lot Mean (MPLM)	Maximum Probable Sample Mean (MPSM)
45 Automatic	120	[3]	1,200	210	217	227
	155		1,125			
	165		1,065			
	170		1,050			
	175		1,020			
	185		915			
			995			
	230		830			
			870			
			915			
45 Automatic Match[4]	185	[3]	765	210	217	227
45 Automatic +P	185	[3]	990	230	237	248
			1,130			
	230		975			
45 Auto Rim	230	[3]	825	N/E	N/E	N/E
45 Colt	200		1,120	140	144	151
	225		915			
			950			
	250		750			
	250-255		900			
45 Glock Automatic Pistol	175	[3]	995	230	237	248
	185		995			
			1,090			
	200		1,020			
	230		830			
			870			
45 Winchester Magnum	230	N/E	1,380	415	428	448
	260		1,200			

[1] Based on sample size η=10.
[2] Vented barrel velocities are provided for information only. Vented test barrels are used for the establishment of catalog velocity values for cartridges normally chambered in revolvers.
[3] Revolvers not normally chambered for this cartridge.
[4] The velocity figures listed for Match items are nominal values; optimum accuracy may require a velocity different from the nominal values.

VELOCITY AND PRESSURE:
VELOCITY & PRESSURE DATA – TRANSDUCER (Cont'd)

(N/E = Not Established)

Cartridge	Bullet Weight (gr.)	Velocity (fps) Nominal Mean Instrumental @ 15' Vented Bbl.[2]	Velocity (fps) Nominal Mean Instrumental @ 15' Test Bbl.	Transducer Pressure (Solid test barrel, psi/100)[1] Maximum Average Pressure (MAP)	Maximum Probable Lot Mean (MPLM)	Maximum Probable Sample Mean (MPSM)
454 Casull	250	N/E	1,420	650	671	702
			1,775			
			2,000			
	260		2,000			
	300	1,625	1,825			
460 S&W Magnum	200	N/E	2,540	650	671	702
	250		1,650			
	260		2,150			
475 Linebaugh	400	1,300	1,400	500	516	540
480 Ruger	325	1,350	1,425	480	495	518
50 Action Express	325	[3]	1,400	350	361	378
500 S&W Magnum	275	N/E	1,620	600	619	647
	300		2,050			
	350		1,400			
			1,800			
	400		1,800			
	440		1,625			
500 Special	350	N/E	1,375	360	371	388

[1] Based on sample size η=10.
[2] Vented barrel velocities are provided for information only. These values are not used for product manufacturing control.
[3] Revolvers not normally chambered for this cartridge.

BULLET TYPE ABBREVIATIONS

LEAD:

HP .....***H***ollow ***P***oint
L .....***L***ead
LHP.....***L***ead ***H***ollow ***P***oint
LSWC .....***L***ead ***S***emi-***W***ad***C***utter
LWC.....***L***ead ***W***ad***C***utter
MP.....***M***etal ***P***oint
SWC.....***S***emi-***W***ad***C***utter
SWCHP.....***S***emi-***W***ad***C***utter ***H***ollow ***P***oint

JACKETED:

BJHP .....***B***rass ***J***acketed ***H***ollow ***P***oint
FP .....***F***lat ***P***oint
FMJ .....***F***ull ***M***etal ***J***acket
FMC .....***F***ull ***M***etal ***C***ase
JFP.....***J***acketed ***F***lat ***P***oint
JHP.....***J***acketed ***H***ollow ***P***oint
JSP.....***J***acketed ***S***oft ***P***oint
MC .....***M***etal ***C***ase
MCHP .....***M***etal ***C***ase ***H***ollow ***P***oint
PHP .....***P***lated ***H***ollow ***P***oint
PSP.....***P***ointed ***S***oft ***P***oint
PT.....***P***olymer ***T***ip
SP .....***S***oft ***P***oint

SEMI-JACKETED:

SJHP.....***S***emi-***J***acketed ***H***ollow ***P***oint
SJSP .....***S***emi-***J***acketed ***S***oft ***P***oint

OTHER:

Solid .....Indicates a bullet constructed of a single material other than lead.

PRIMERS AND PRIMER POCKETS

CUP MAY BE ROUNDED OR FLAT

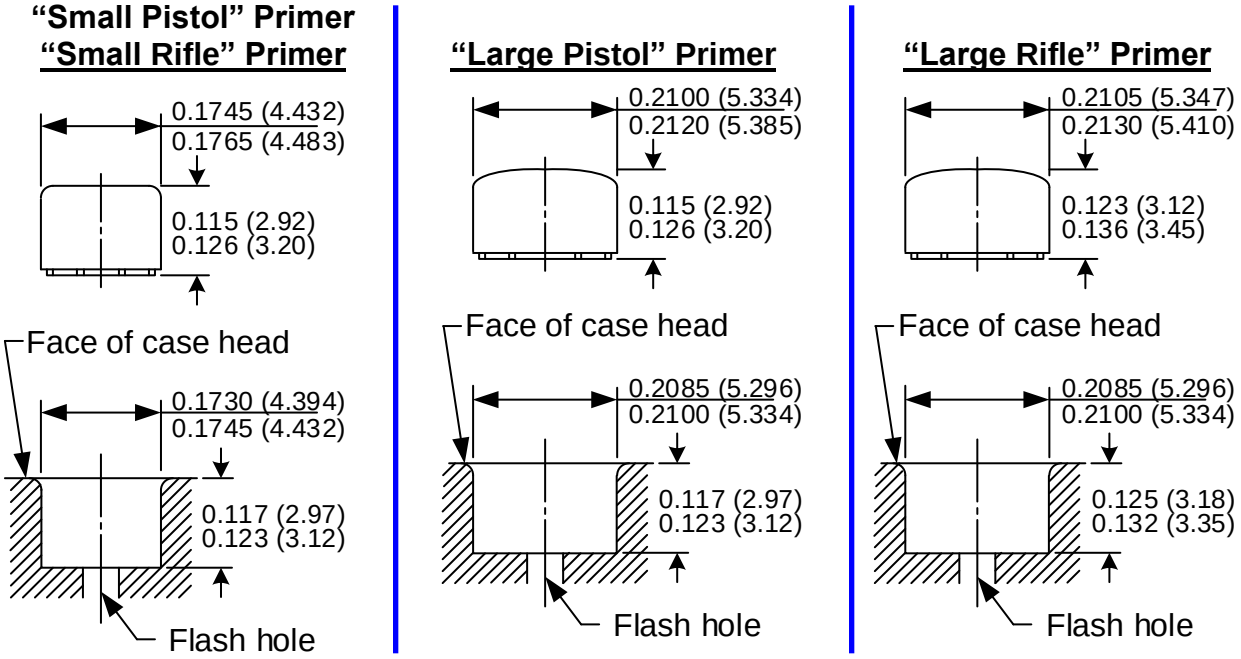

**PRIMERS TO BE SEATED FLUSH TO 0.008" (0.20)
BELOW FACE OF CARTRIDGE CASE HEAD**

NOTE

(XX.XX) = MILLIMETERS

Note: This drawing is subject to change.
Current version is available at www.saami.org.

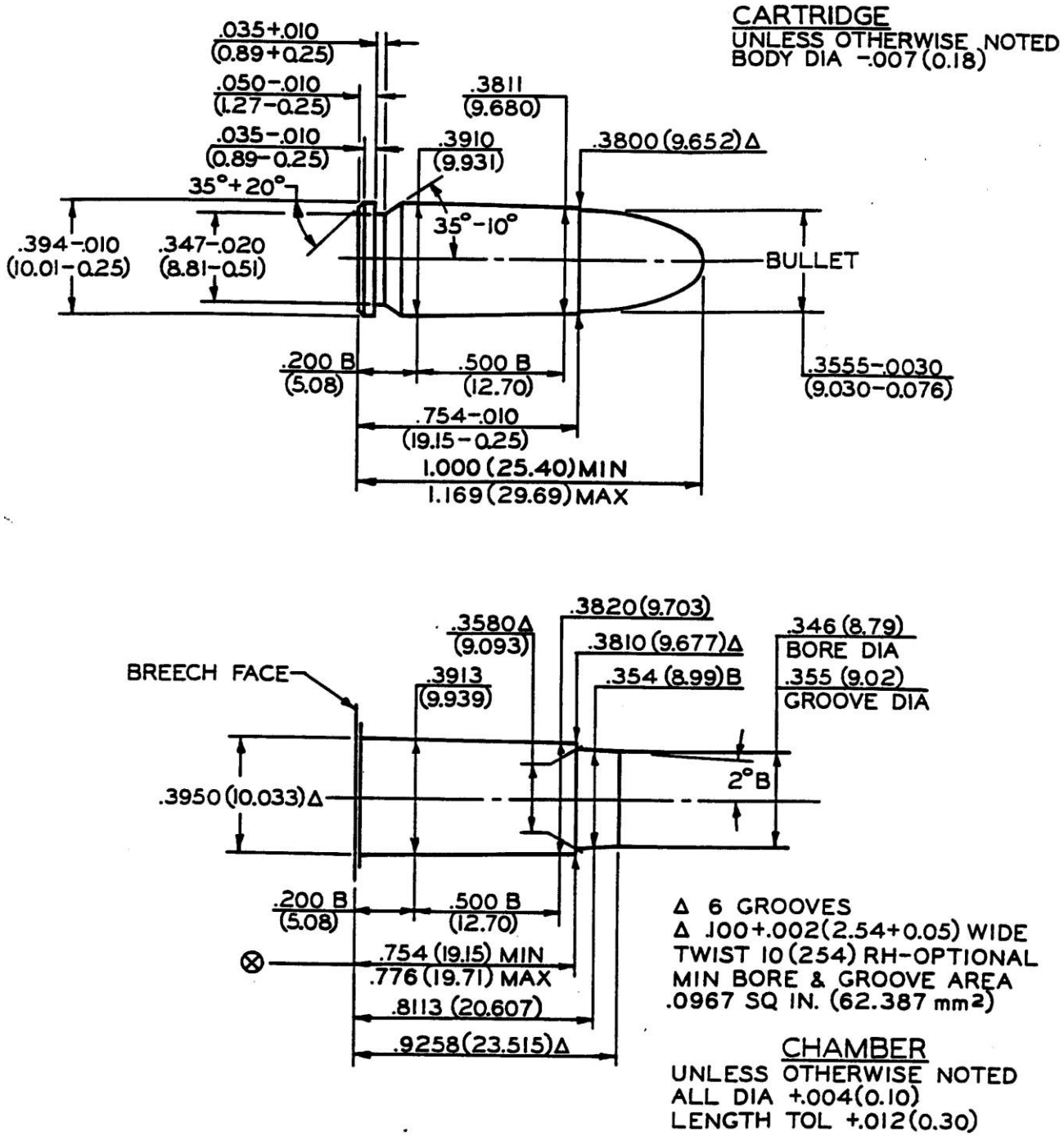

NOTE

B = BASIC
Δ = REFERENCE DIMENSION
⊗ = HEADSPACE DIMENSION
(XX.XX) = MILLIMETERS
✻= DIMENSIONS TO INTERSECTIONS OF LINES
ALL CALCULATIONS APPLY AT MAXIMUM MATERIAL CONDITION (MMC)

CARTRIDGE AND CHAMBER DRAWING
9x18 MAKAROV

Note: This drawing is subject to change.
Current version is available at www.saami.org.

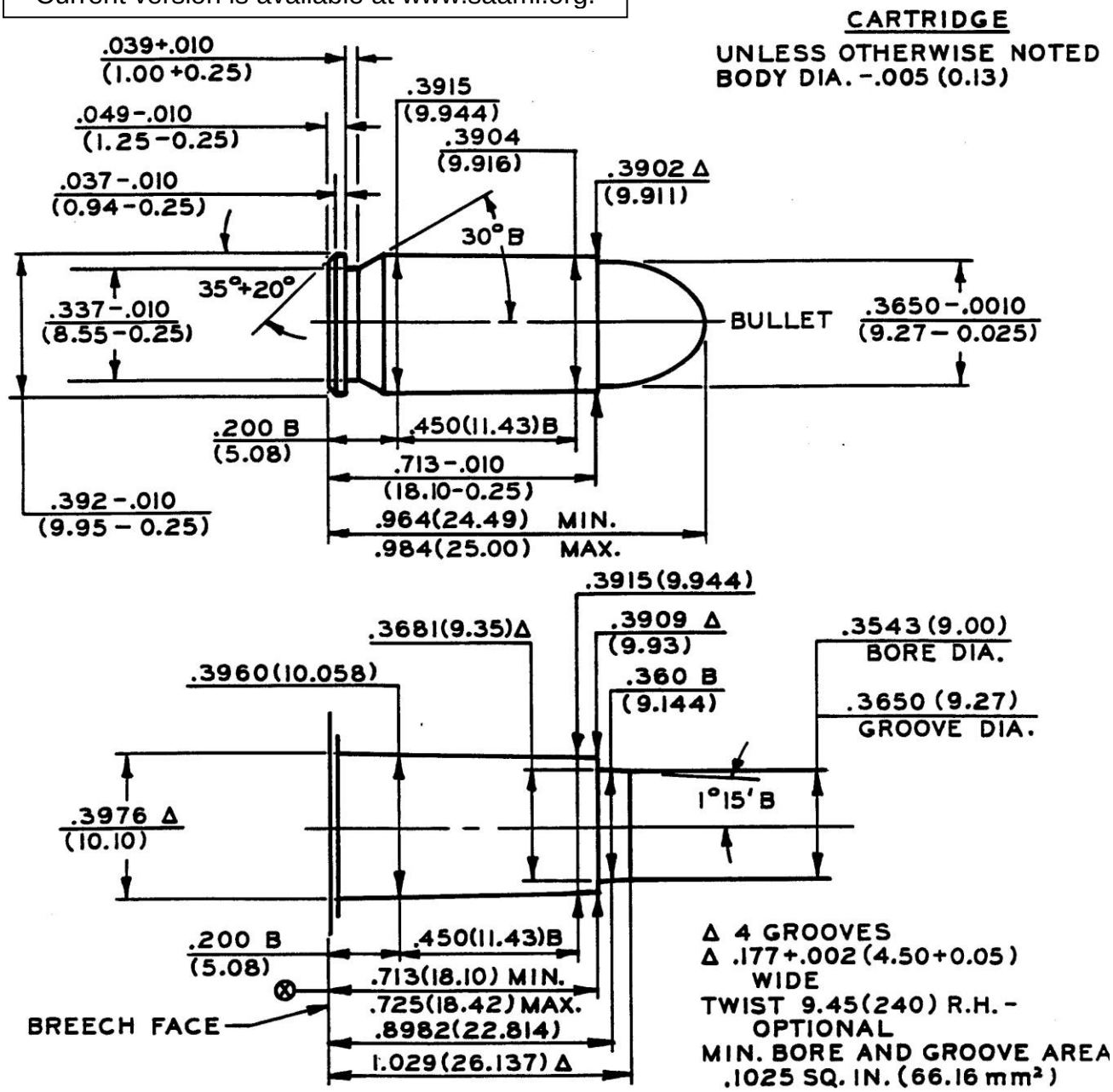

NOTE

B = BASIC
Δ = REFERENCE DIMENSION
⊗ = HEADSPACE DIMENSION
(XX.XX) = MILLIMETERS
✻= DIMENSIONS TO INTERSECTIONS OF LINES
ALL CALCULATIONS APPLY AT MAXIMUM MATERIAL CONDITION (MMC)

CARTRIDGE AND CHAMBER DRAWING
9x23 WINCHESTER

Note: This drawing is subject to change.
Current version is available at www.saami.org.

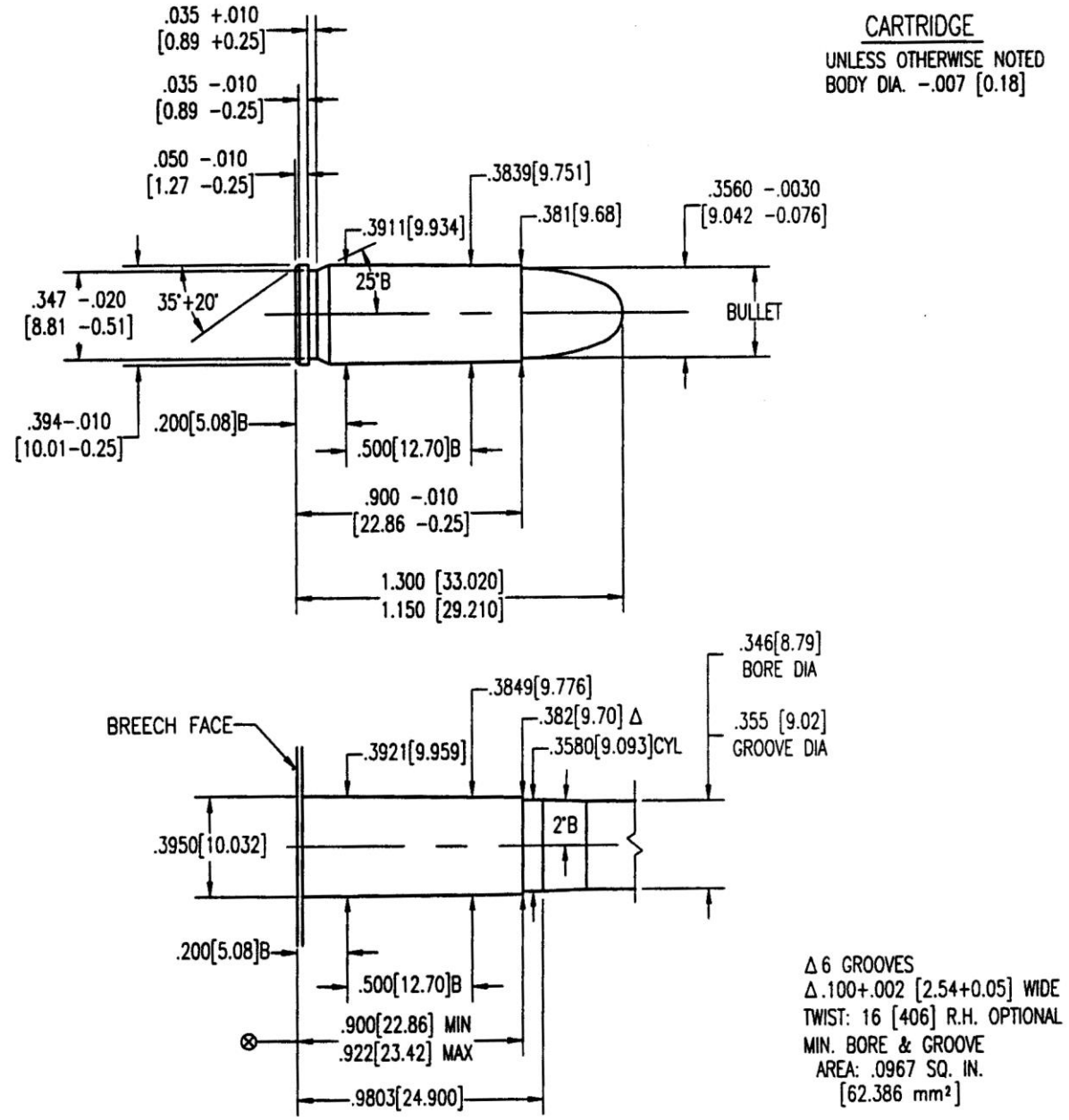

NOTE

B = BASIC
Δ = REFERENCE DIMENSION
⊗ = HEADSPACE DIMENSION
(XX.XX) = MILLIMETERS
✻= DIMENSIONS TO INTERSECTIONS OF LINES
ALL CALCULATIONS APPLY AT MAXIMUM MATERIAL CONDITION (MMC)

CARTRIDGE AND CHAMBER DRAWING
10mm AUTOMATIC

Note: This drawing is subject to change.
Current version is available at www.saami.org.

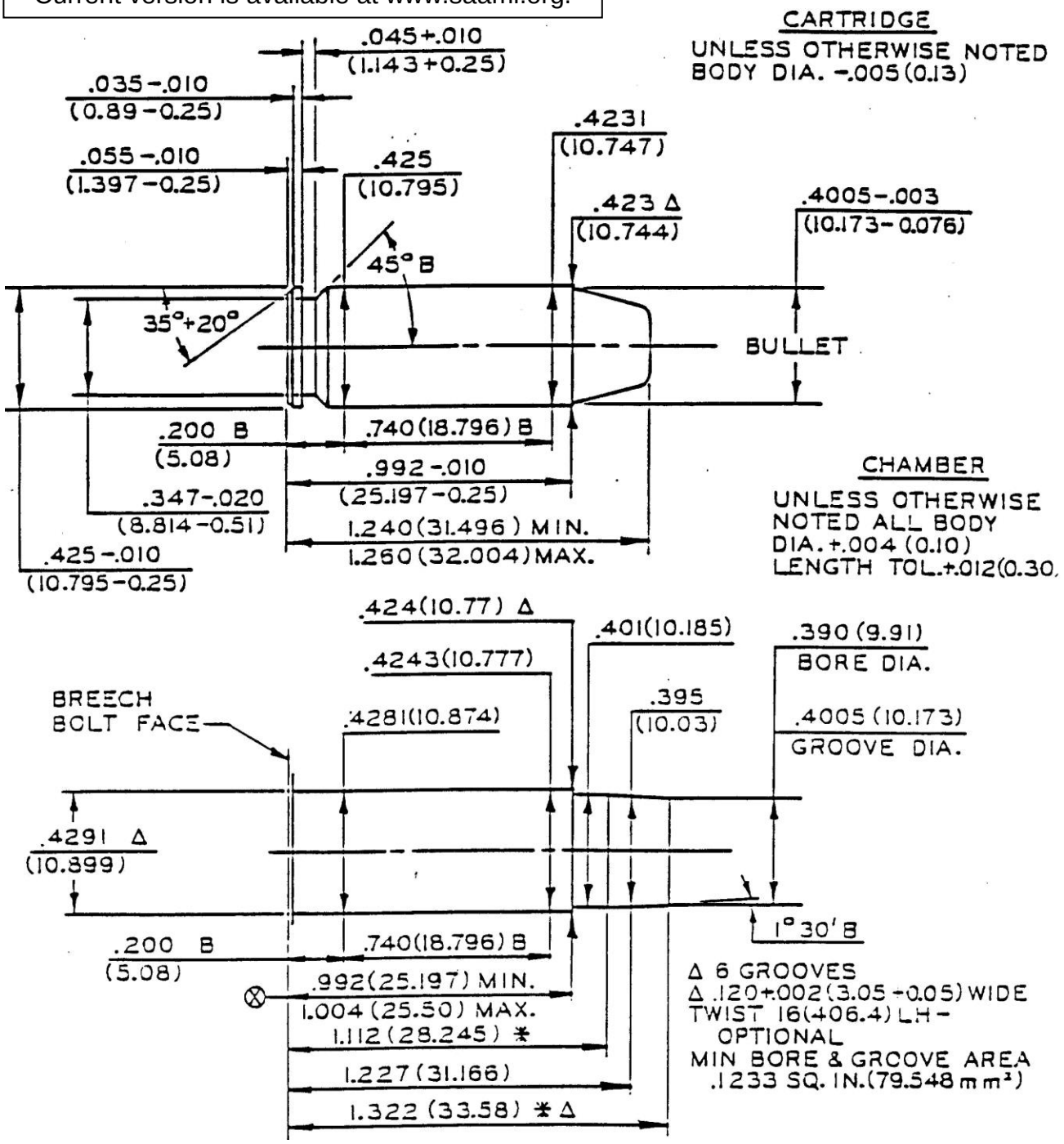

NOTE

B = BASIC
Δ = REFERENCE DIMENSION
⊗ = HEADSPACE DIMENSION
(XX.XX) = MILLIMETERS
* = DIMENSIONS TO INTERSECTIONS OF LINES
ALL CALCULATIONS APPLY AT MAXIMUM MATERIAL CONDITION (MMC)

CARTRIDGE AND CHAMBER DRAWING
221 REMINGTON FIREBALL

Note: This drawing is subject to change.
Current version is available at www.saami.org.

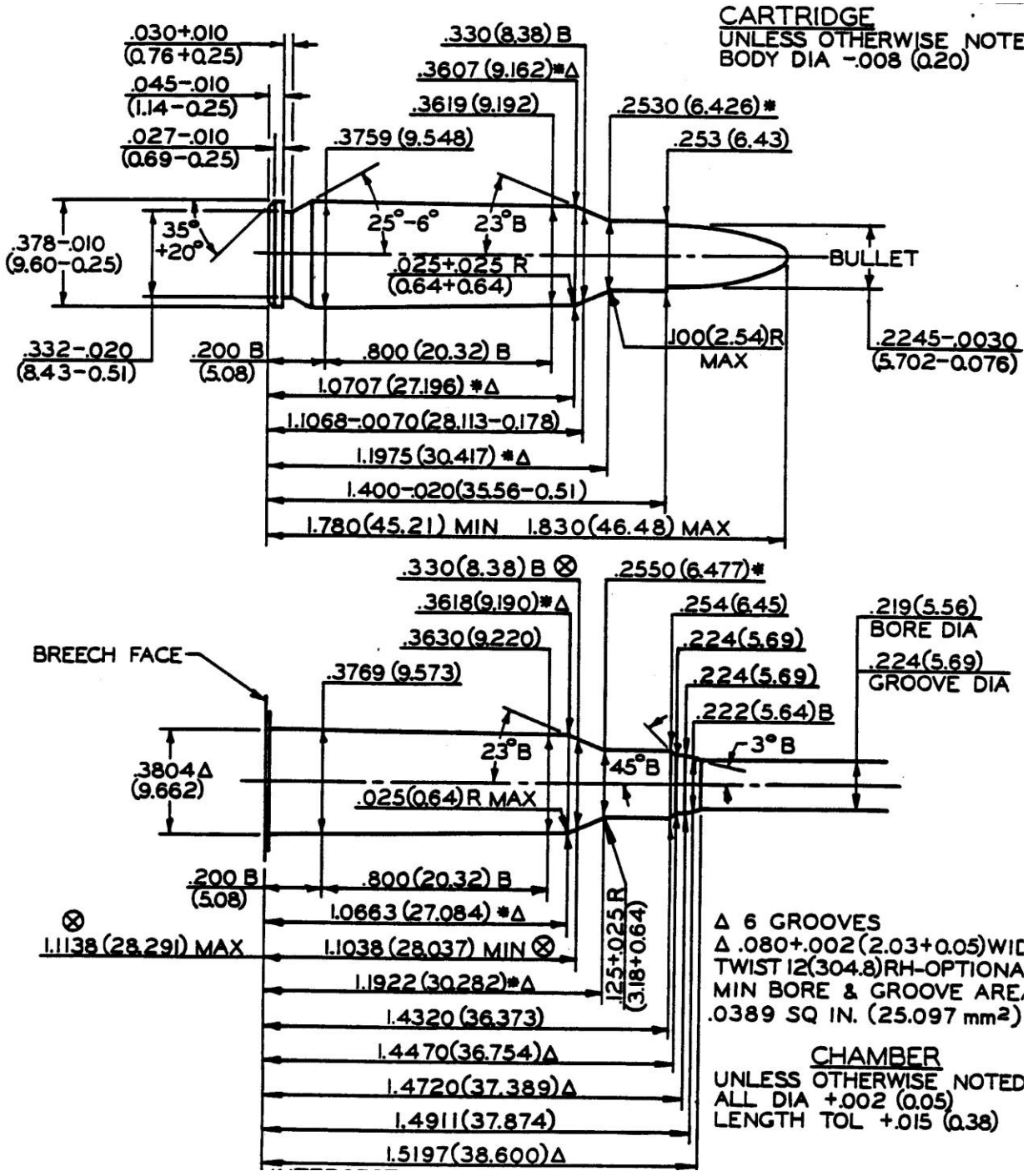

NOTE

B = BASIC
Δ = REFERENCE DIMENSION
⊗ = HEADSPACE DIMENSION
(XX.XX) = MILLIMETERS
* = DIMENSIONS TO INTERSECTIONS OF LINES
ALL CALCULATIONS APPLY AT MAXIMUM MATERIAL CONDITION (MMC)

CARTRIDGE AND CHAMBER DRAWING
25 AUTOMATIC

Note: This drawing is subject to change.
Current version is available at www.saami.org.

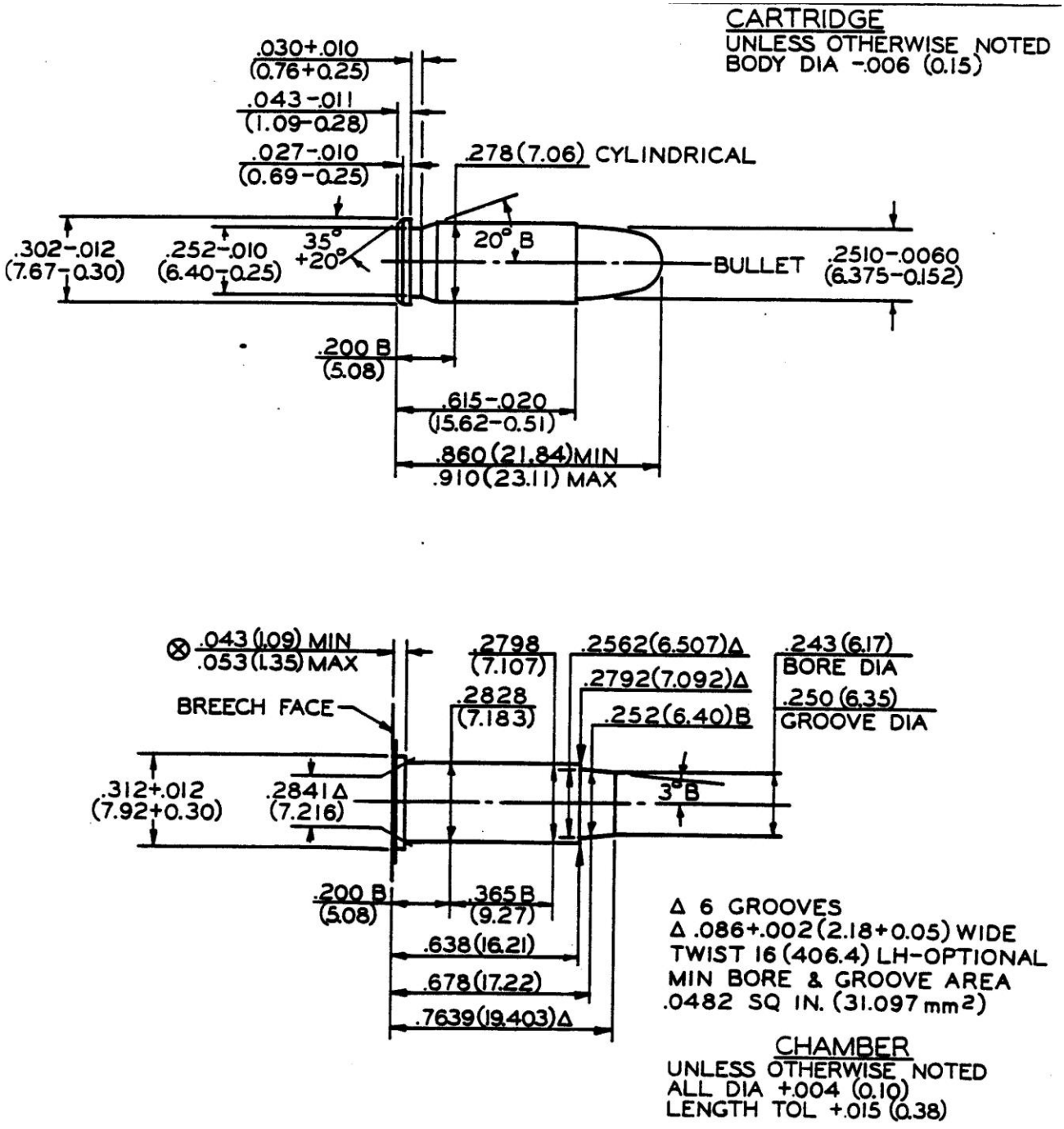

NOTE

B = BASIC
Δ = REFERENCE DIMENSION
⊗ = HEADSPACE DIMENSION
(XX.XX) = MILLIMETERS
✻= DIMENSIONS TO INTERSECTIONS OF LINES
ALL CALCULATIONS APPLY AT MAXIMUM MATERIAL CONDITION (MMC)

Note: This drawing is subject to change.
Current version is available at www.saami.org.

SAAMI
Sporting Arms and Ammunition Manufacturers' Institute, Inc.
Since 1926

MAXIMUM CARTRIDGE / MINIMUM CHAMBER

25 NORTH AMERICAN ARMS

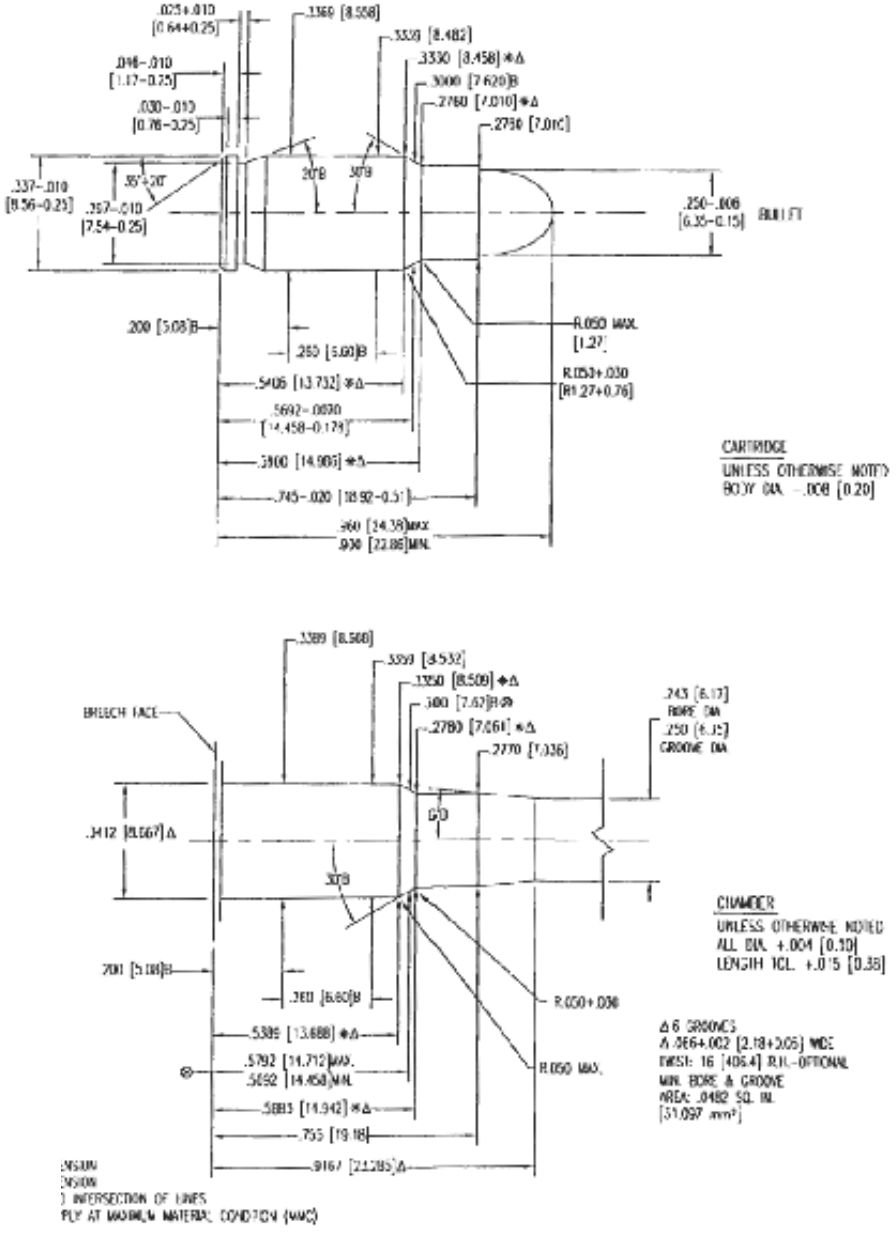

COPYRIGHT © SPORTING ARMS AND AMMUNITION MANUFACTURERS' INSTITUTE, INC. ("SAAMI"). ALL RIGHTS RESERVED.
Reproduction, republication or redistribution of SAAMI technical drawings and data sheets in any manner, in whole or in part, without SAAMI's prior written consent is prohibited.

CARTRIDGE AND CHAMBER DRAWING
30 LUGER (7.65mm)

Note: This drawing is subject to change.
Current version is available at www.saami.org.

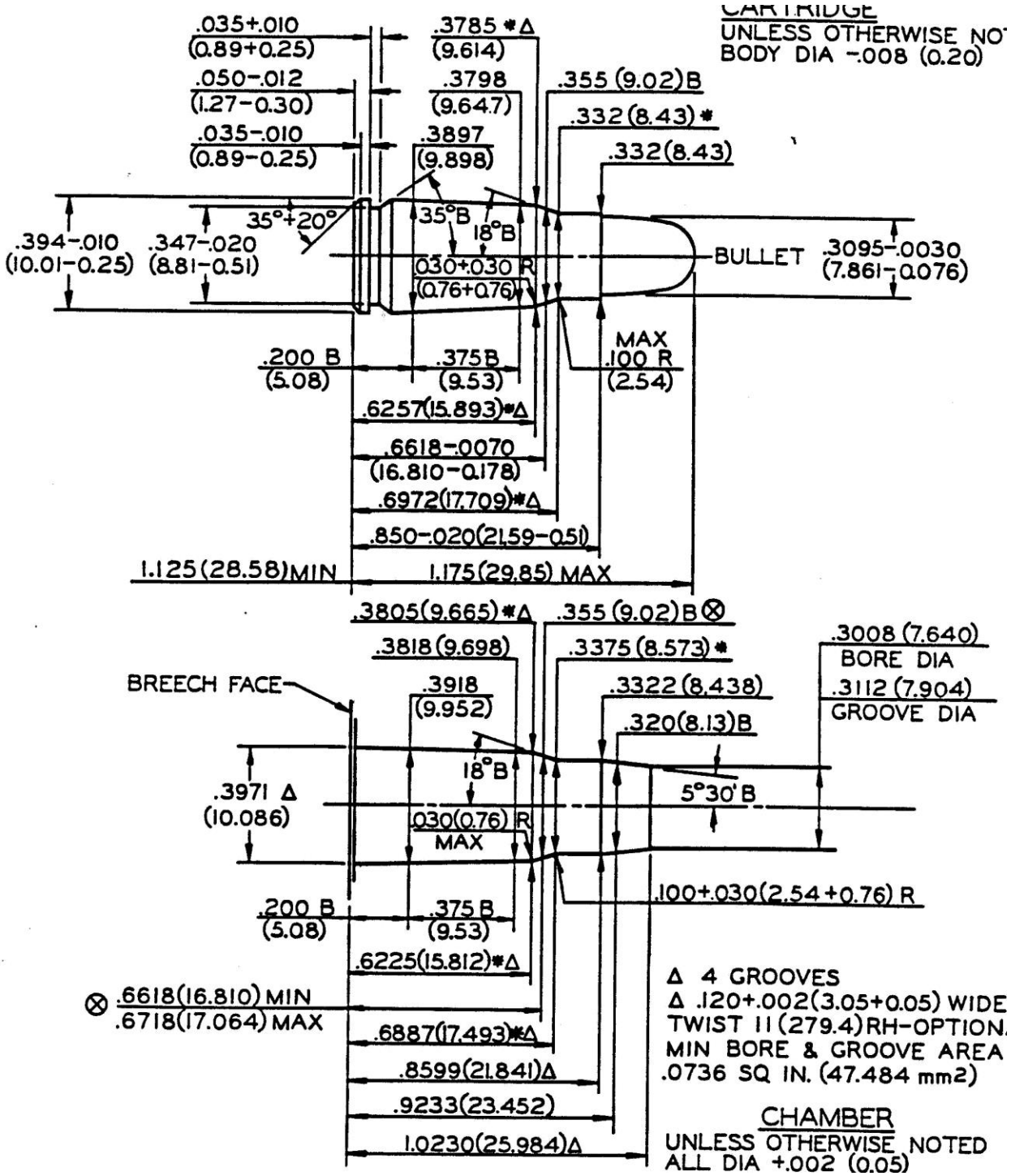

NOTE

B = BASIC
Δ = REFERENCE DIMENSION
⊗ = HEADSPACE DIMENSION
(XX.XX) = MILLIMETERS
* = DIMENSIONS TO INTERSECTIONS OF LINES
ALL CALCULATIONS APPLY AT MAXIMUM MATERIAL CONDITION (MMC)

CARTRIDGE AND CHAMBER DRAWING
32 AUTOMATIC

Note: This drawing is subject to change.
Current version is available at www.saami.org.

CARTRIDGE
UNLESS OTHERWISE NOTEI
BODY DIA –.006 (0.15)

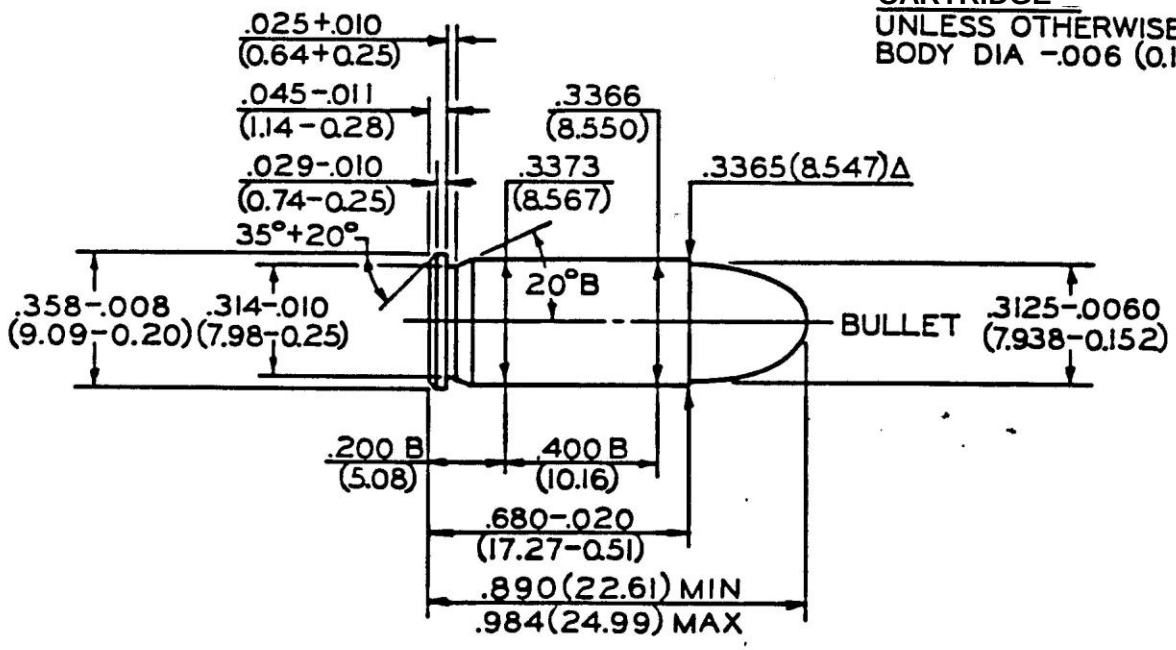

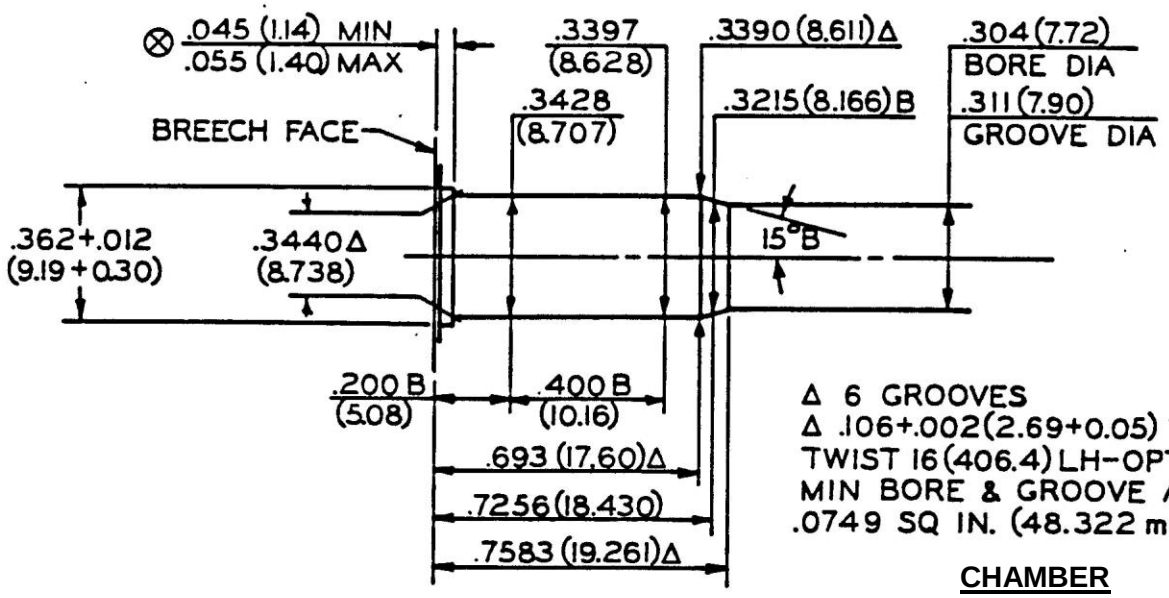

Δ 6 GROOVES
Δ .106+.002(2.69+0.05) WIDE
TWIST 16(406.4) LH–OPTIONAL
MIN BORE & GROOVE AREA
.0749 SQ IN. (48.322 mm²)

CHAMBER
UNLESS OTHERWISE NOTED
ALL DIA +.004 (0.10)
LENGTH TOL +.015 (0.38)

NOTE
B = BASIC
Δ = REFERENCE DIMENSION
⊗ = HEADSPACE DIMENSION
(XX.XX) = MILLIMETERS
✻= DIMENSIONS TO INTERSECTIONS OF LINES
ALL CALCULATIONS APPLY AT MAXIMUM MATERIAL CONDITION (MMC)

CARTRIDGE AND CHAMBER DRAWING
32 H&R MAGNUM

Note: This drawing is subject to change.
Current version is available at www.saami.org.

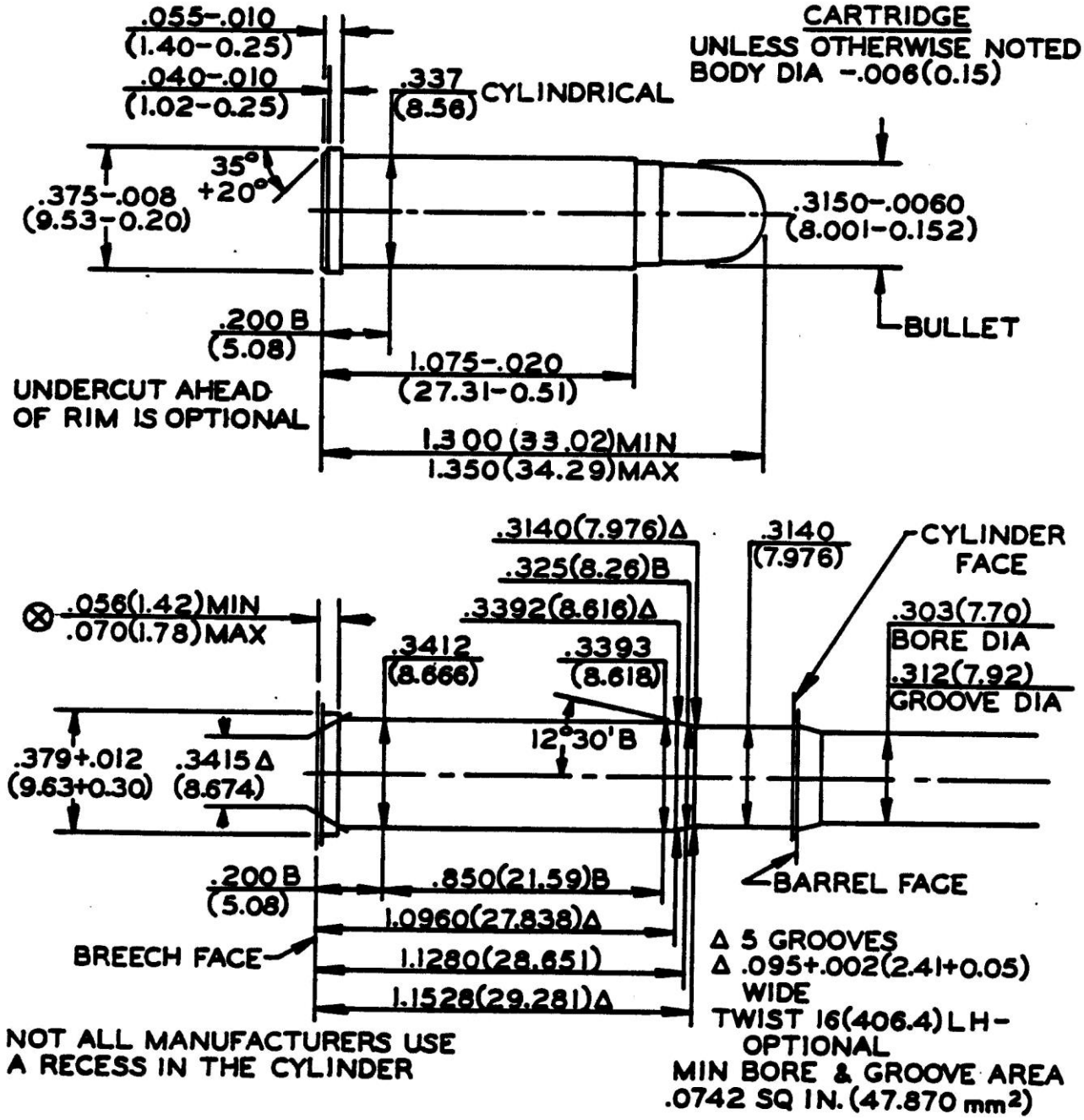

CHAMBER
UNLESS OTHERWISE NOTED
ALL DIA +.004 (0.10)
LENGTH TOL +.015 (0.38)

NOTE
B = BASIC
Δ = REFERENCE DIMENSION
⊗ = HEADSPACE DIMENSION
(XX.XX) = MILLIMETERS
∗ = DIMENSIONS TO INTERSECTIONS OF LINES
ALL CALCULATIONS APPLY AT MAXIMUM MATERIAL CONDITION (MMC)

Note: This drawing is subject to change.
Current version is available at www.saami.org.

SAAMI
Sporting Arms and Ammunition Manufacturers' Institute, Inc.
Since 1926

MAXIMUM CARTRIDGE / MINIMUM CHAMBER

32 NORTH AMERICAN ARMS

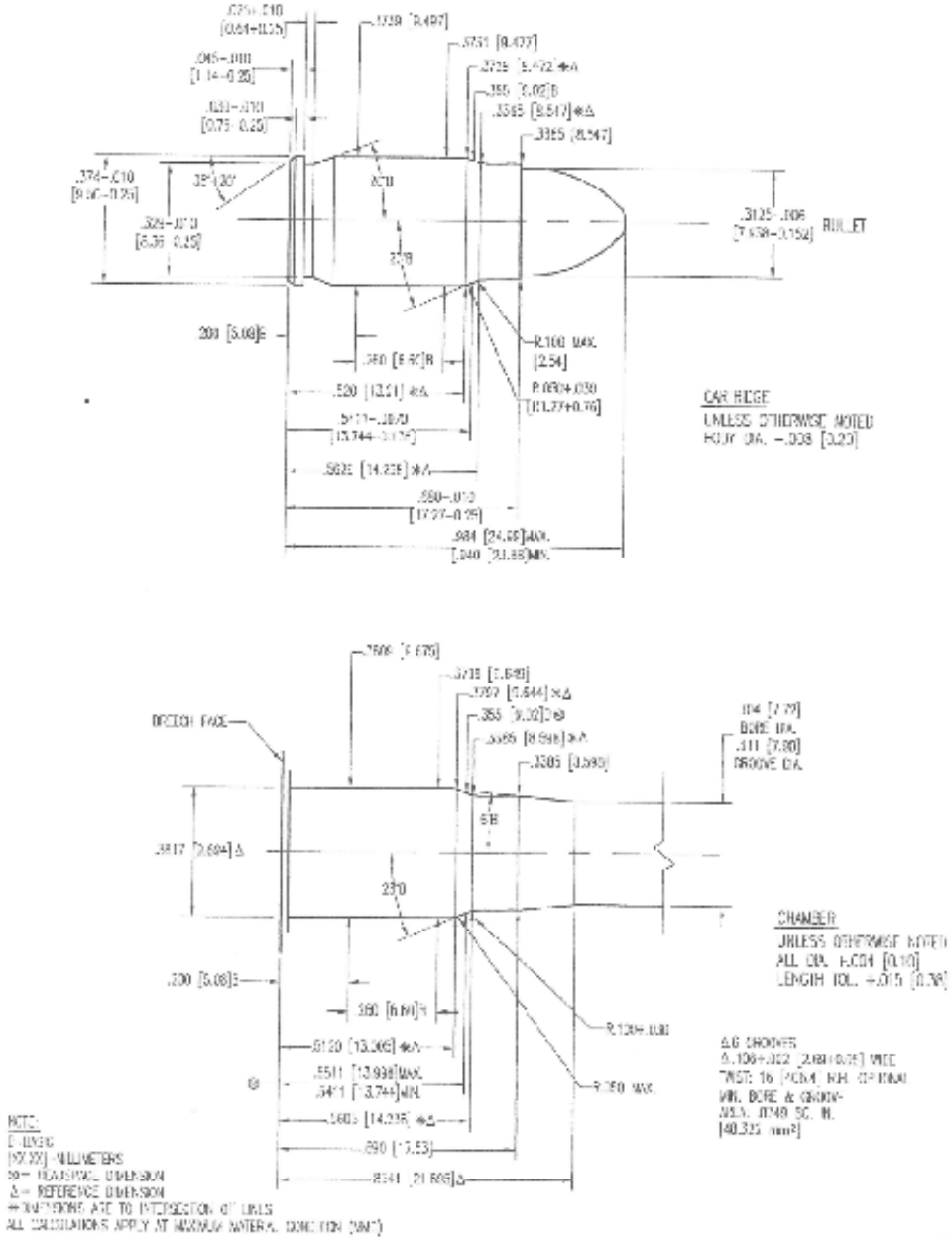

COPYRIGHT © SPORTING ARMS AND AMMUNITION MANUFACTURERS' INSTITUTE, INC. ("SAAMI"). ALL RIGHTS RESERVED.
Reproduction, republication or redistribution of SAAMI technical drawings and data sheets in any manner, in whole or in part, without SAAMI's prior written consent is prohibited.

CARTRIDGE AND CHAMBER DRAWING
32 SHORT COLT

Note: This drawing is subject to change.
Current version is available at www.saami.org.

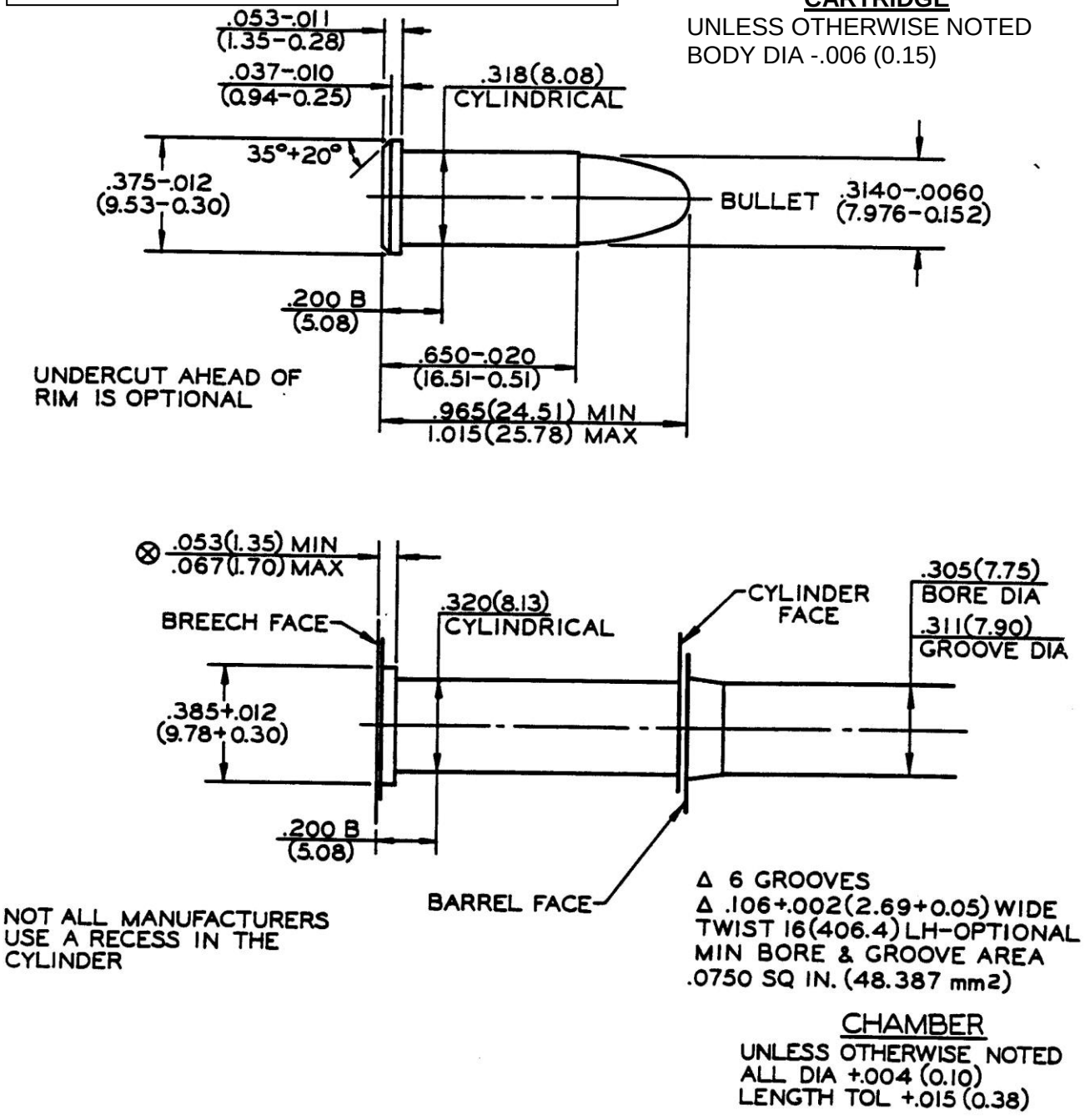

CARTRIDGE
UNLESS OTHERWISE NOTED
BODY DIA -.006 (0.15)

CHAMBER
UNLESS OTHERWISE NOTED
ALL DIA +.004 (0.10)
LENGTH TOL +.015 (0.38)

NOTE
B = BASIC
Δ = REFERENCE DIMENSION
⊗ = HEADSPACE DIMENSION
(XX.XX) = MILLIMETERS
∗= DIMENSIONS TO INTERSECTIONS OF LINES
ALL CALCULATIONS APPLY AT MAXIMUM MATERIAL CONDITION (MMC)

CARTRIDGE AND CHAMBER DRAWING
32 SMITH & WESSON

Note: This drawing is subject to change.
Current version is available at www.saami.org.

CARTRIDGE
UNLESS OTHERWISE NOTED
BODY DIA -.006 (0.15)

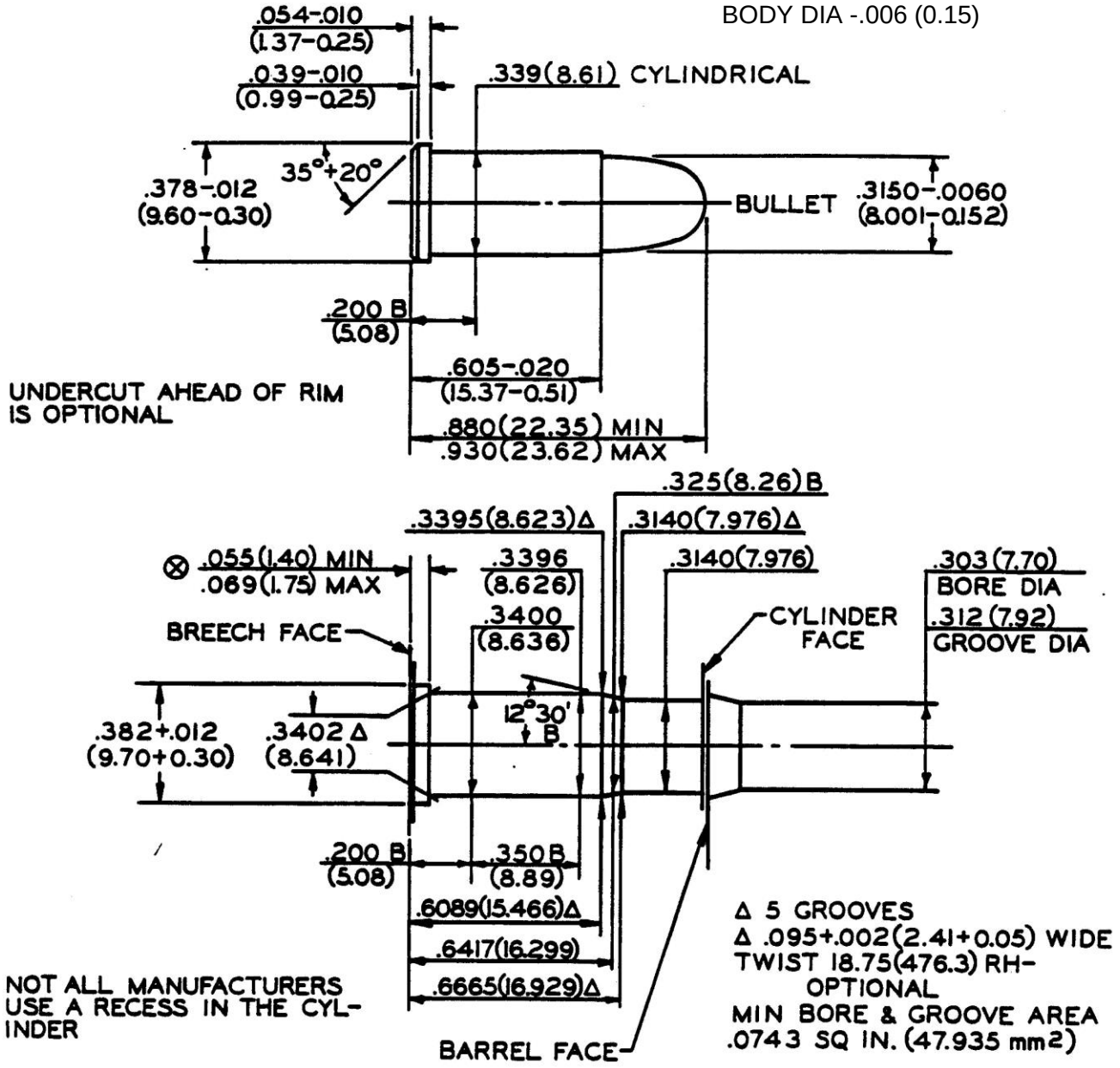

CHAMBER
UNLESS OTHERWISE NOTED
ALL DIA +.002(0.05)
LENGTH TOL +.015(0.38)

NOTE
B = BASIC
Δ = REFERENCE DIMENSION
⊗ = HEADSPACE DIMENSION
(XX.XX) = MILLIMETERS
✻= DIMENSIONS TO INTERSECTIONS OF LINES
ALL CALCULATIONS APPLY AT MAXIMUM MATERIAL CONDITION (MMC)

CARTRIDGE AND CHAMBER DRAWING
32 SMITH & WESSON LONG
(32 COLT NEW POLICE)

Note: This drawing is subject to change.
Current version is available at www.saami.org.

CARTRIDGE

UNLESS OTHERWISE NOTED
BODY DIA -.006 (0.15)

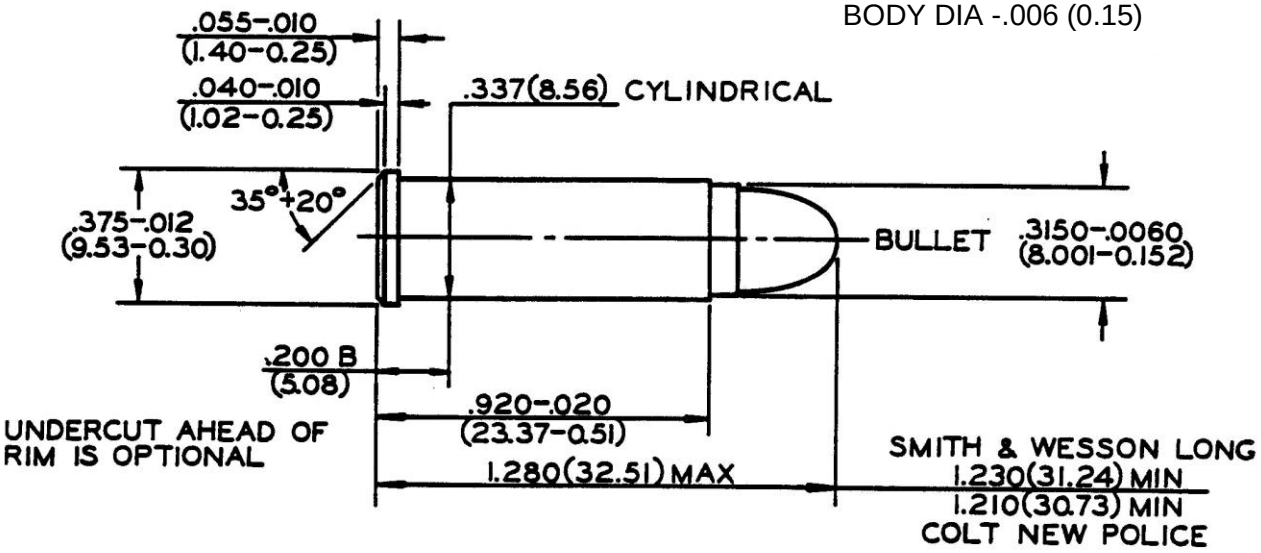

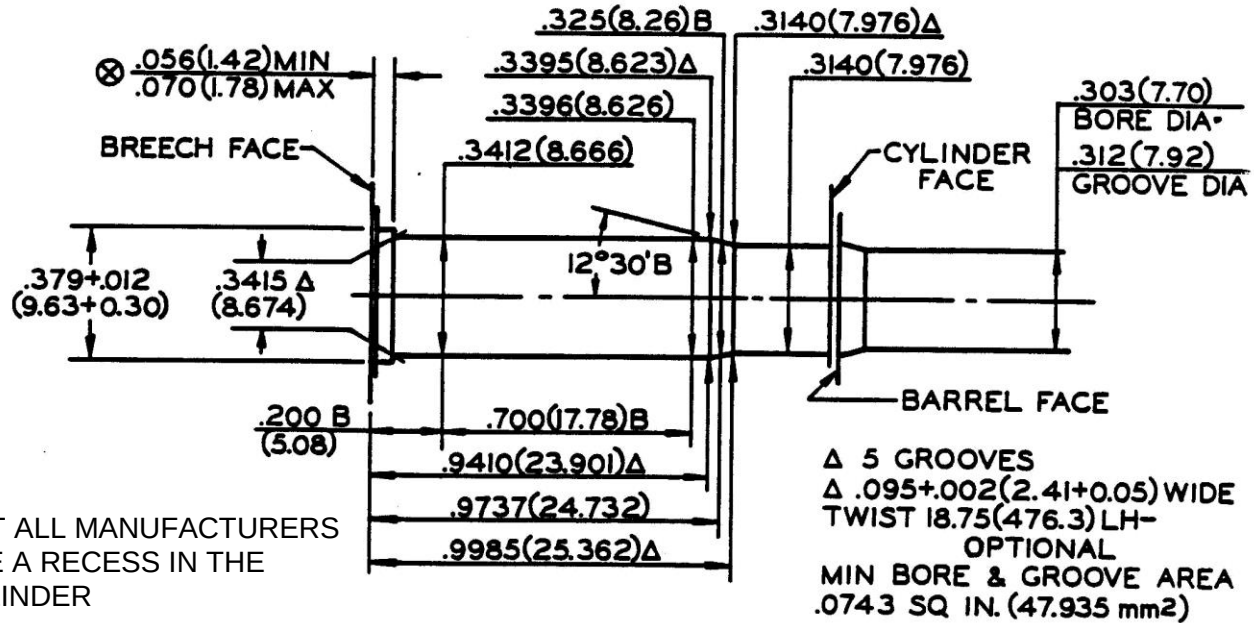

NOT ALL MANUFACTURERS USE A RECESS IN THE CYLINDER

CHAMBER

UNLESS OTHERWISE NOTED
ALL DIA +.004 (0.10)
LENGTH TOL +.015 (0.38)

NOTE

B = BASIC
Δ = REFERENCE DIMENSION
⊗ = HEADSPACE DIMENSION
(XX.XX) = MILLIMETERS
∗= DIMENSIONS TO INTERSECTIONS OF LINES
ALL CALCULATIONS APPLY AT MAXIMUM MATERIAL CONDITION (MMC)

CARTRIDGE AND CHAMBER DRAWING
32 SMITH & WESSON LONG WADCUTTER

Note: This drawing is subject to change.
Current version is available at www.saami.org.

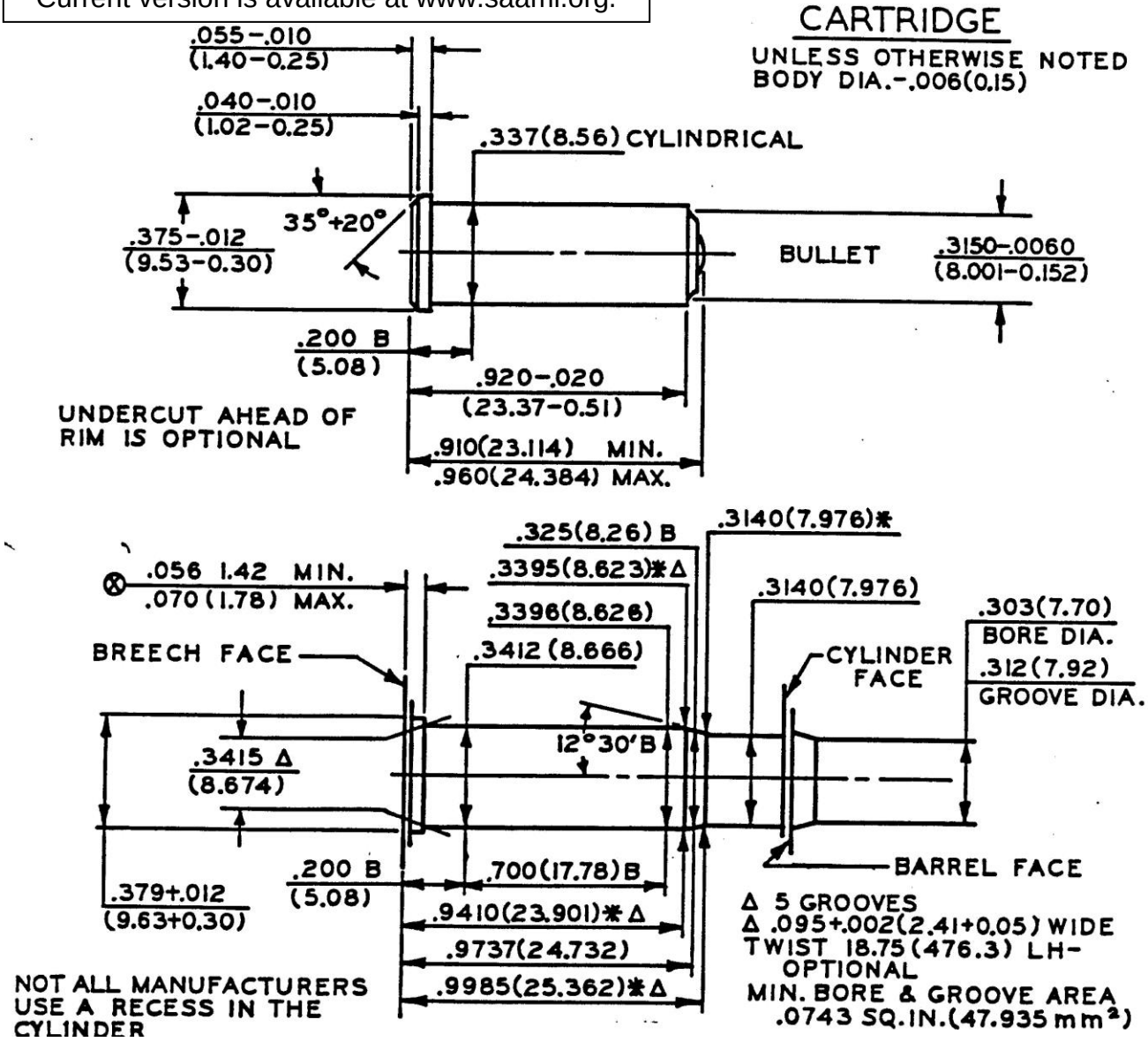

CHAMBER

UNLESS OTHERWISE NOTED
ALL DIA +.004 (0.10)
LENGTH TOL +.015 (0.38)

NOTE

B = BASIC
Δ = REFERENCE DIMENSION
⊗ = HEADSPACE DIMENSION
(XX.XX) = MILLIMETERS
* = DIMENSIONS TO INTERSECTIONS OF LINES
ALL CALCULATIONS APPLY AT MAXIMUM MATERIAL CONDITION (MMC)

CARTRIDGE AND CHAMBER DRAWING
327 FEDERAL MAGNUM

Note: This drawing is subject to change.
Current version is available at www.saami.org.

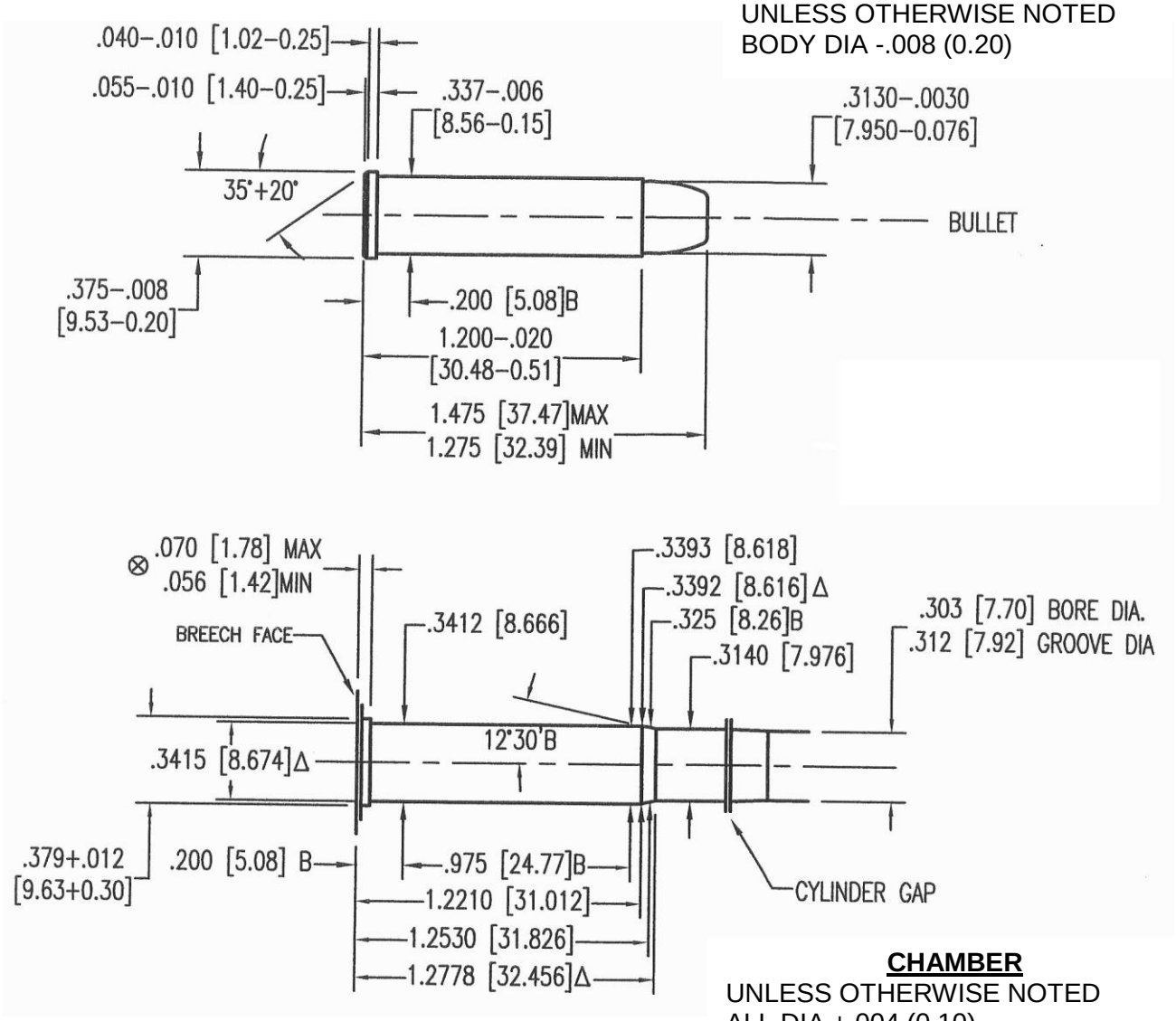

CARTRIDGE
UNLESS OTHERWISE NOTED
BODY DIA -.008 (0.20)

CHAMBER
UNLESS OTHERWISE NOTED
ALL DIA +.004 (0.10)
LENGTH TOL +.015 (0.38)

Δ 5 GROOVES
Δ .095+.002 (2.41+0.05) WIDE
TWIST 16.00 (406.4) LH – OPTIONAL
MIN. BORE & GROOVE AREA:
.0742 IN^2 (47.870 mm^2)

NOTE
B = BASIC
Δ = REFERENCE DIMENSION
⊗ = HEADSPACE DIMENSION
(XX.XX) = MILLIMETERS
∗= DIMENSIONS TO INTERSECTIONS OF LINES
ALL CALCULATIONS APPLY AT MAXIMUM MATERIAL CONDITION (MMC)

Note: This drawing is subject to change.
Current version is available at www.saami.org.

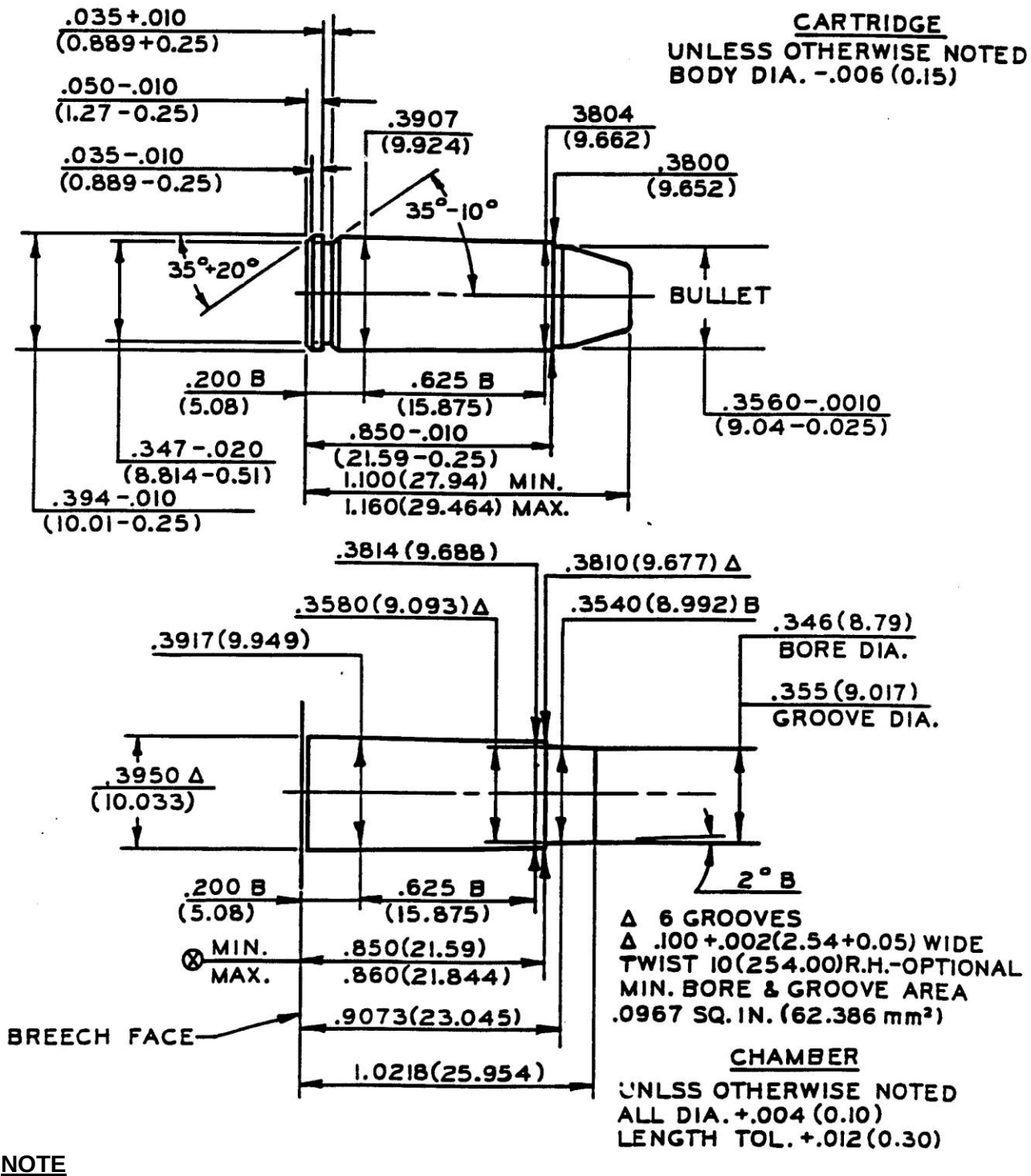

NOTE

B = BASIC
Δ = REFERENCE DIMENSION
⊗ = HEADSPACE DIMENSION
(XX.XX) = MILLIMETERS
✻= DIMENSIONS TO INTERSECTIONS OF LINES
ALL CALCULATIONS APPLY AT MAXIMUM MATERIAL CONDITION (MMC)

CARTRIDGE AND CHAMBER DRAWING
357 MAGNUM

Note: This drawing is subject to change.
Current version is available at www.saami.org.

CARTRIDGE

UNLESS OTHERWISE NOTED
BODY DIA -.006 (0.15)

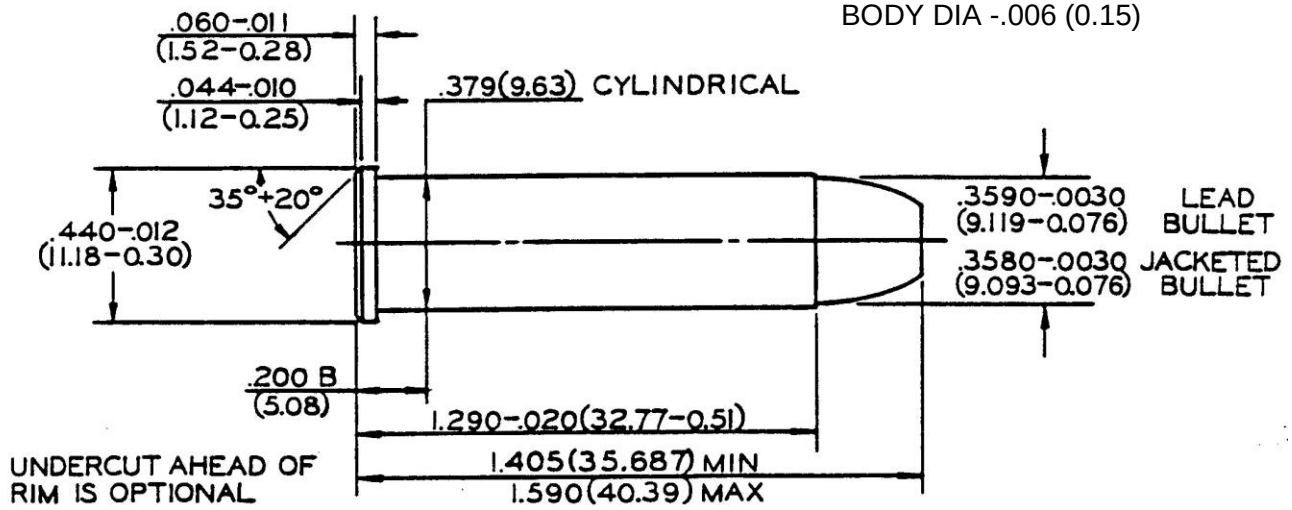

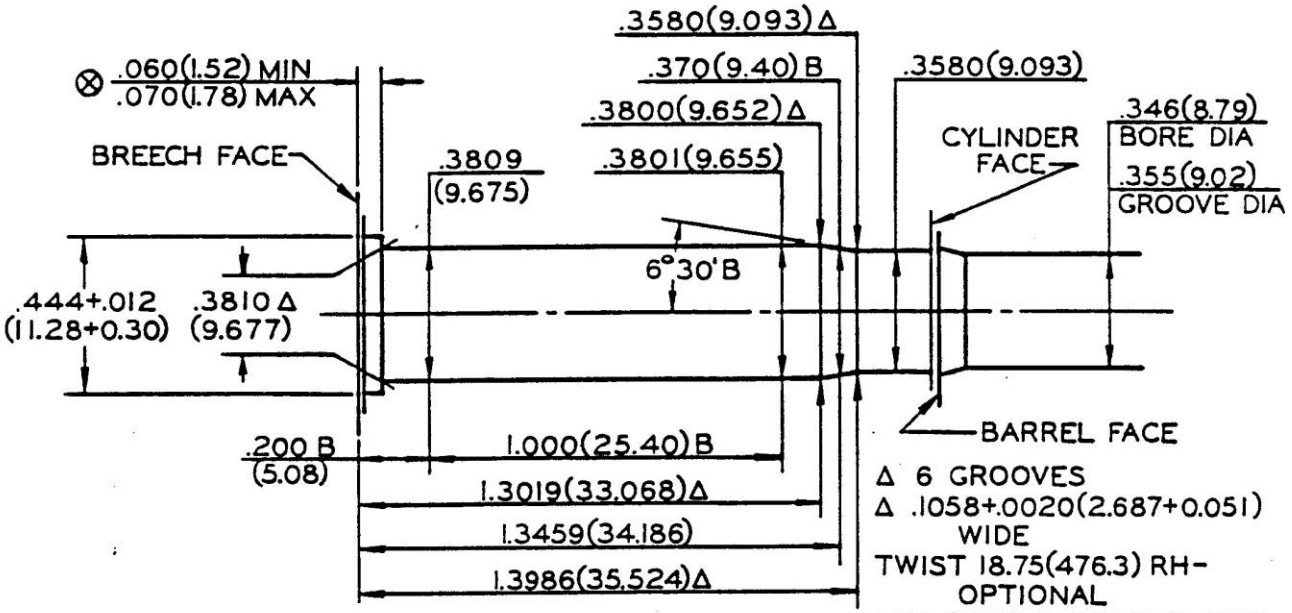

Δ 6 GROOVES
Δ .1058+.0020(2.687+0.051)
WIDE
TWIST 18.75(476.3) RH-
OPTIONAL
MIN BORE & GROOVE AREA
.0969 SQ IN. (62.516 mm²)

NOT ALL MANUFACTURERS
USE A RECESS IN THE
CYLINDER

CHAMBER

UNLESS OTHERWISE NOTED
ALL DIA +.004(0.10)
LENGTH TOL +.015(0.38)

NOTE

B = BASIC
Δ = REFERENCE DIMENSION
⊗ = HEADSPACE DIMENSION
(XX.XX) = MILLIMETERS
✻= DIMENSIONS TO INTERSECTIONS OF LINES
ALL CALCULATIONS APPLY AT MAXIMUM MATERIAL CONDITION (MMC)

CARTRIDGE AND CHAMBER DRAWING
357 SIG

Note: This drawing is subject to change.
Current version is available at www.saami.org.

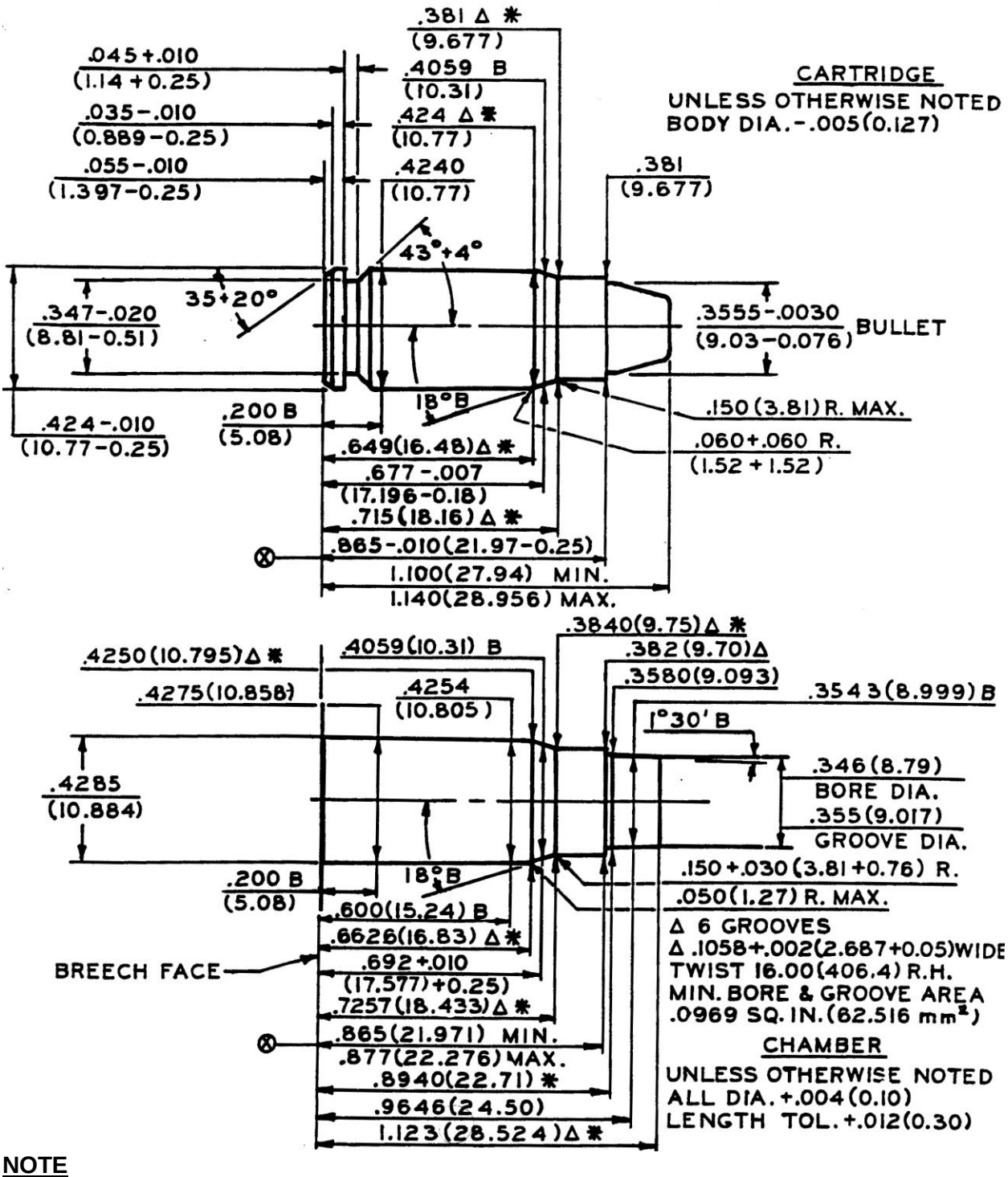

NOTE

B = BASIC
Δ = REFERENCE DIMENSION
⊗ = HEADSPACE DIMENSION
(XX.XX) = MILLIMETERS
✱= DIMENSIONS TO INTERSECTIONS OF LINES
ALL CALCULATIONS APPLY AT MAXIMUM MATERIAL CONDITION (MMC)

CARTRIDGE AND CHAMBER DRAWING
38 SMITH & WESSON
(38 COLT NEW POLICE)

Note: This drawing is subject to change.
Current version is available at www.saami.org.

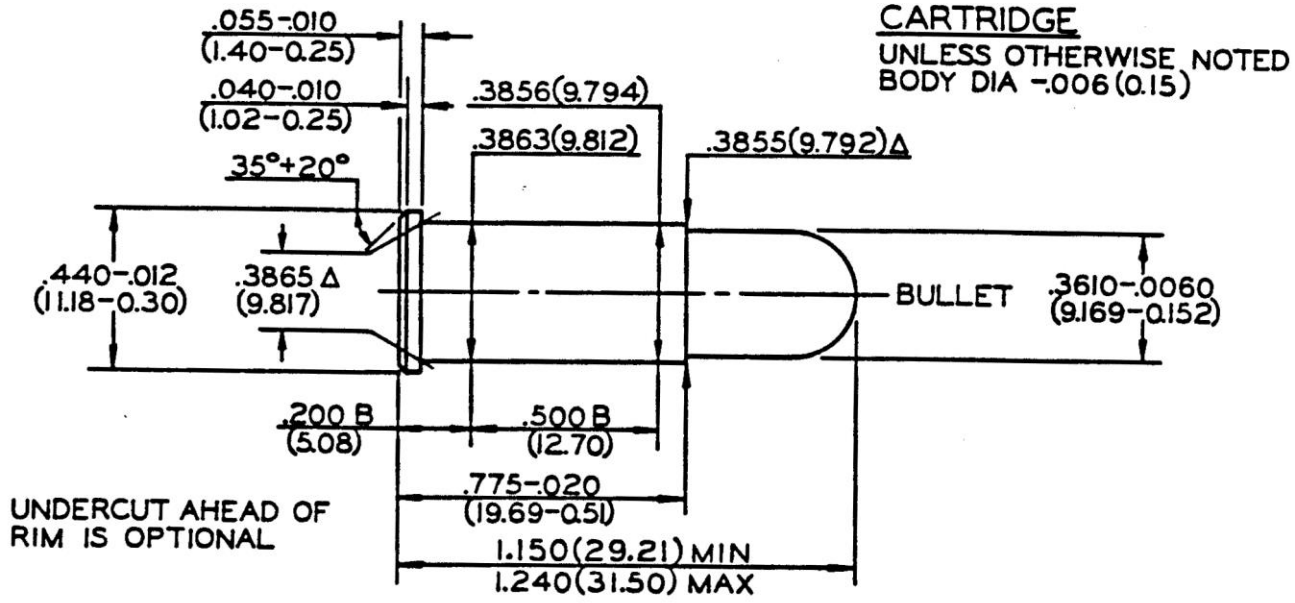

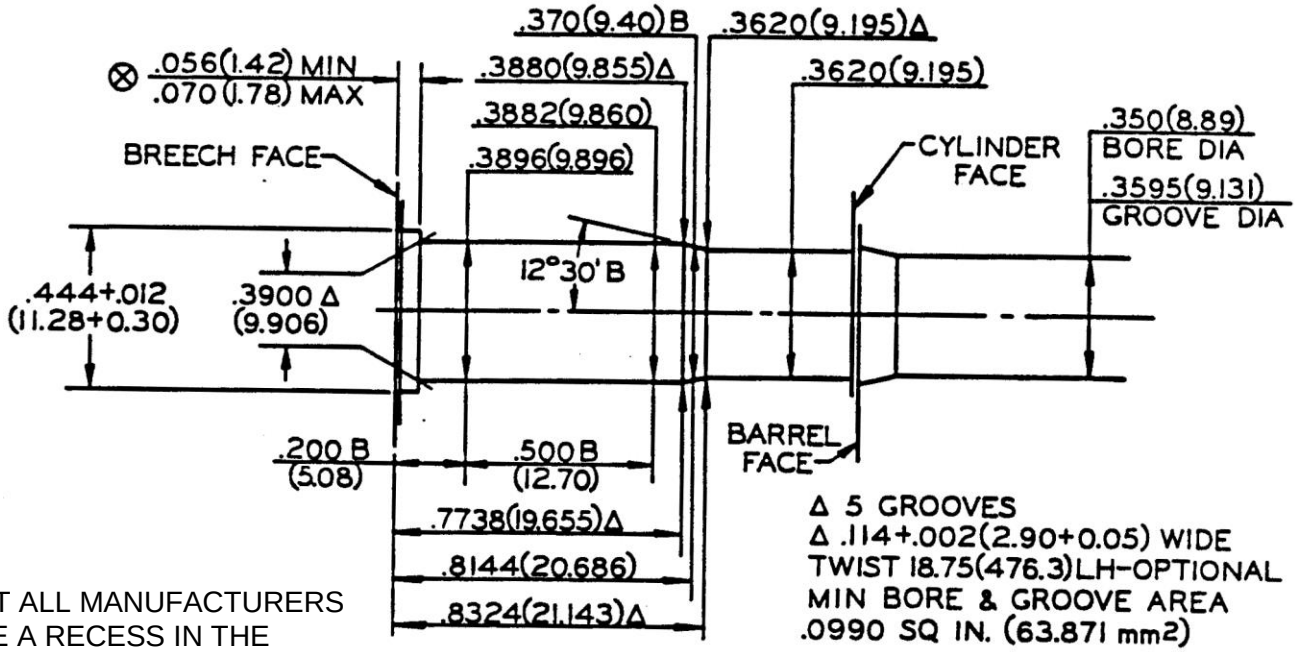

NOT ALL MANUFACTURERS USE A RECESS IN THE CYLINDER

CHAMBER

UNLESS OTHERWISE NOTED
ALL DIA +.004 (0.10)
LENGTH TOL +.015 (0.38)

NOTE

B = BASIC
Δ = REFERENCE DIMENSION
⊗ = HEADSPACE DIMENSION
(XX.XX) = MILLIMETERS
∗= DIMENSIONS TO INTERSECTIONS OF LINES
ALL CALCULATIONS APPLY AT MAXIMUM MATERIAL CONDITION (MMC)

CARTRIDGE AND CHAMBER DRAWING
38 SPECIAL / 38 SPECIAL +P

Note: This drawing is subject to change.
Current version is available at www.saami.org.

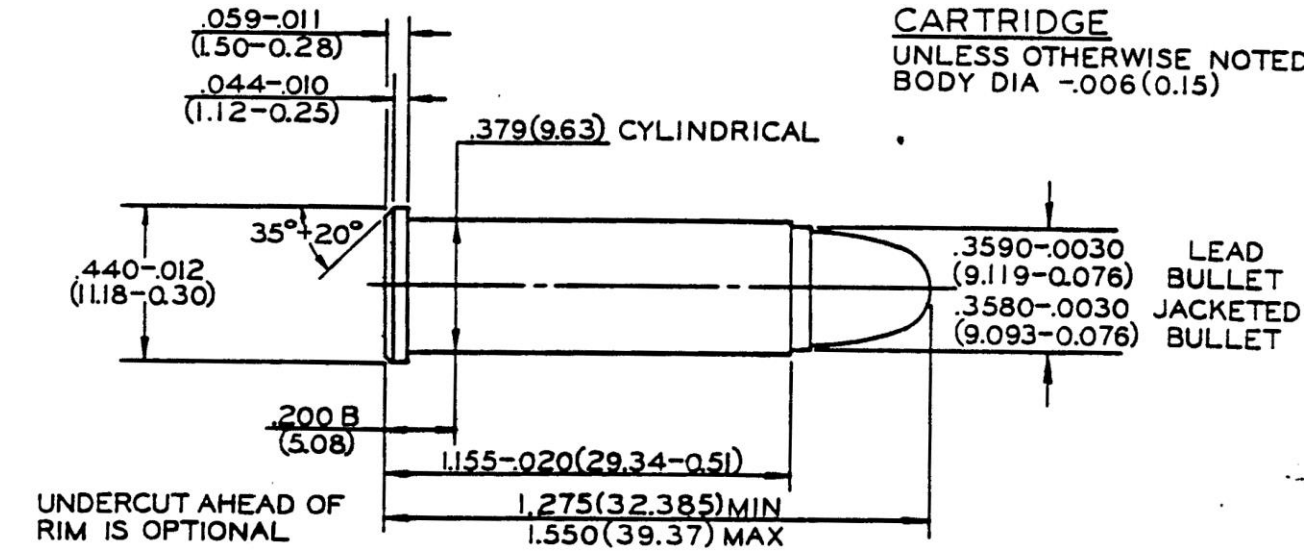

CARTRIDGE
UNLESS OTHERWISE NOTED
BODY DIA -.006(0.15)

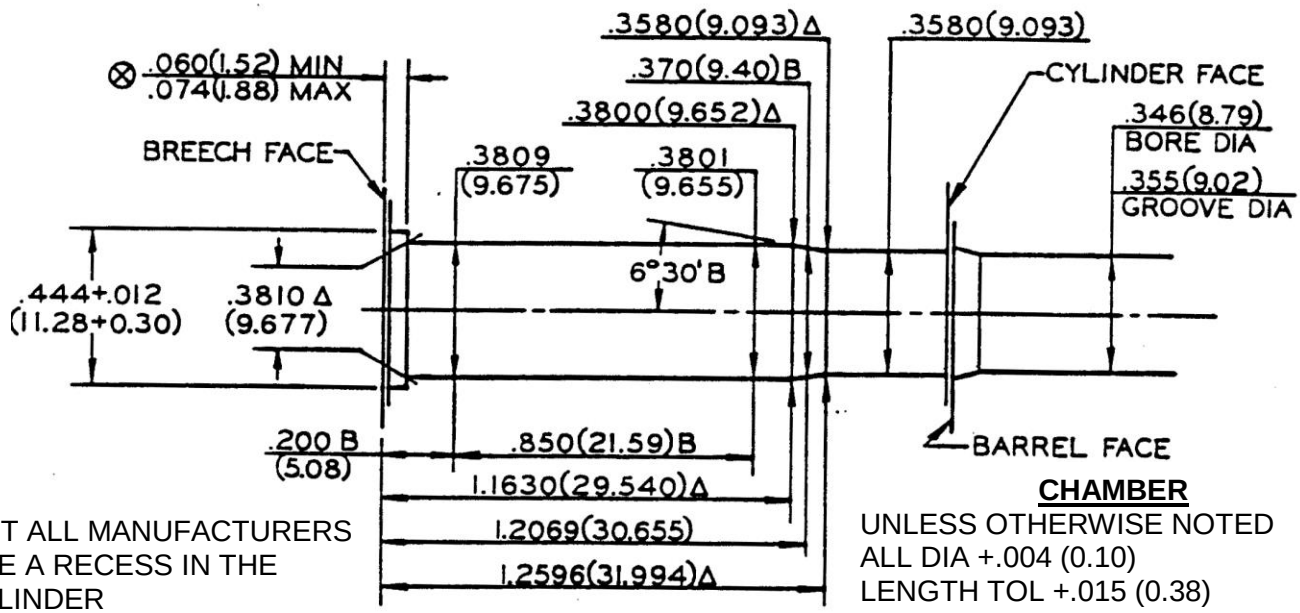

NOT ALL MANUFACTURERS USE A RECESS IN THE CYLINDER

CHAMBER
UNLESS OTHERWISE NOTED
ALL DIA +.004 (0.10)
LENGTH TOL +.015 (0.38)

Δ 6 GROOVES
Δ .105+.002 (2.67+0.05) WIDE
TWIST 18.75 (476.3) RH – OPTIONAL
MIN. BORE & GROOVE AREA:
.0969 IN^2 (62.516 mm^2)

NOTE
B = BASIC
Δ = REFERENCE DIMENSION
⊗ = HEADSPACE DIMENSION
(XX.XX) = MILLIMETERS
✻= DIMENSIONS TO INTERSECTIONS OF LINES
ALL CALCULATIONS APPLY AT MAXIMUM MATERIAL CONDITION (MMC)

CARTRIDGE AND CHAMBER DRAWING
38 SPECIAL MATCH (REVOLVER)

Note: This drawing is subject to change.
Current version is available at www.saami.org.

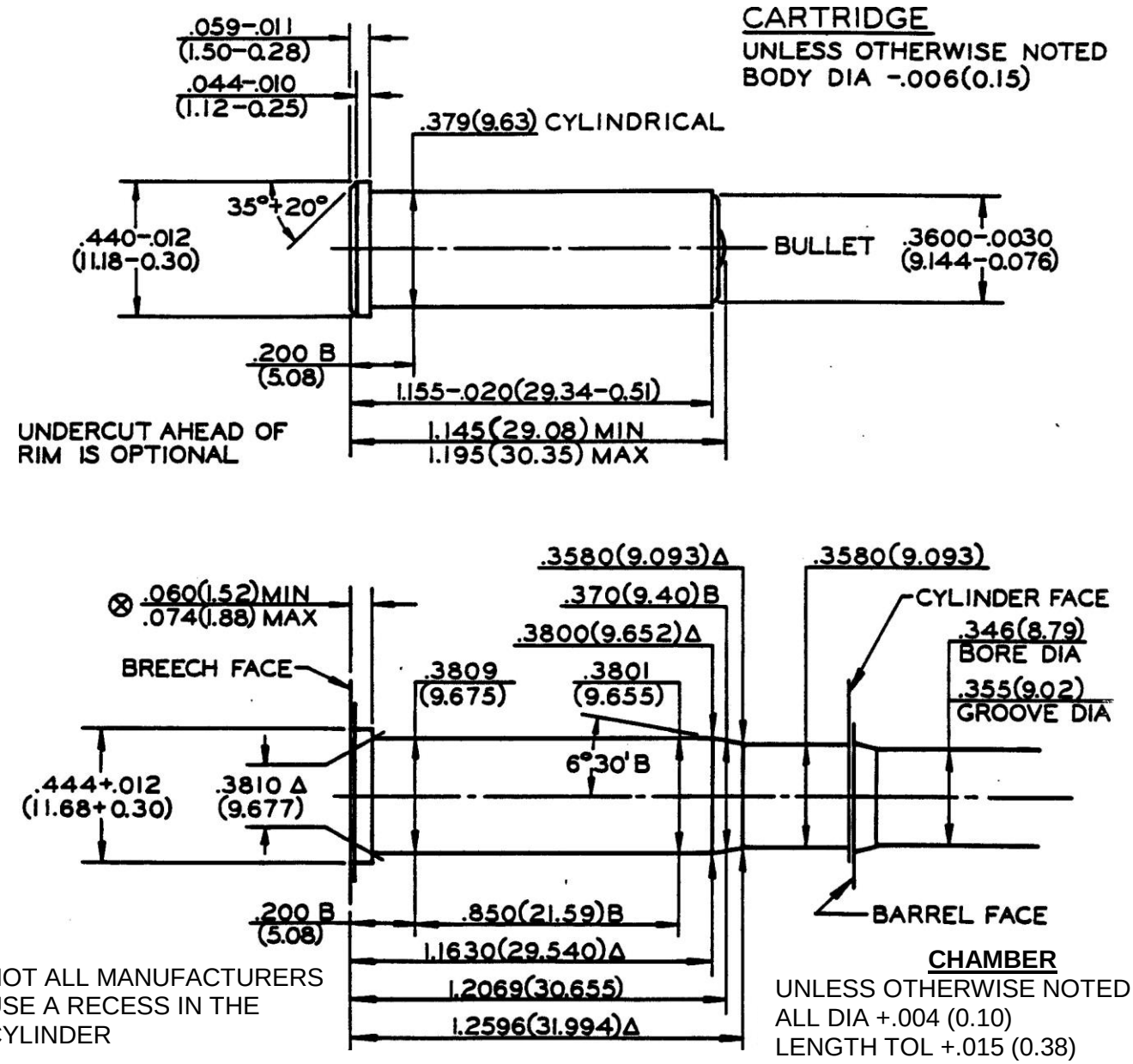

NOT ALL MANUFACTURERS USE A RECESS IN THE CYLINDER

CHAMBER

UNLESS OTHERWISE NOTED
ALL DIA +.004 (0.10)
LENGTH TOL +.015 (0.38)

Δ 6 GROOVES
Δ .105+.002 (2.67+0.05) WIDE
TWIST 18.75 (476.3) RH – OPTIONAL
MIN. BORE & GROOVE AREA:
.0969 IN^2 (62.516 mm^2)

NOTE

B = BASIC
Δ = REFERENCE DIMENSION
⊗ = HEADSPACE DIMENSION
(XX.XX) = MILLIMETERS
✻= DIMENSIONS TO INTERSECTIONS OF LINES
ALL CALCULATIONS APPLY AT MAXIMUM MATERIAL CONDITION (MMC)

CARTRIDGE AND CHAMBER DRAWING
38 SUPER AUTOMATIC +P / 38 AUTOMATIC

Note: This drawing is subject to change.
Current version is available at www.saami.org.

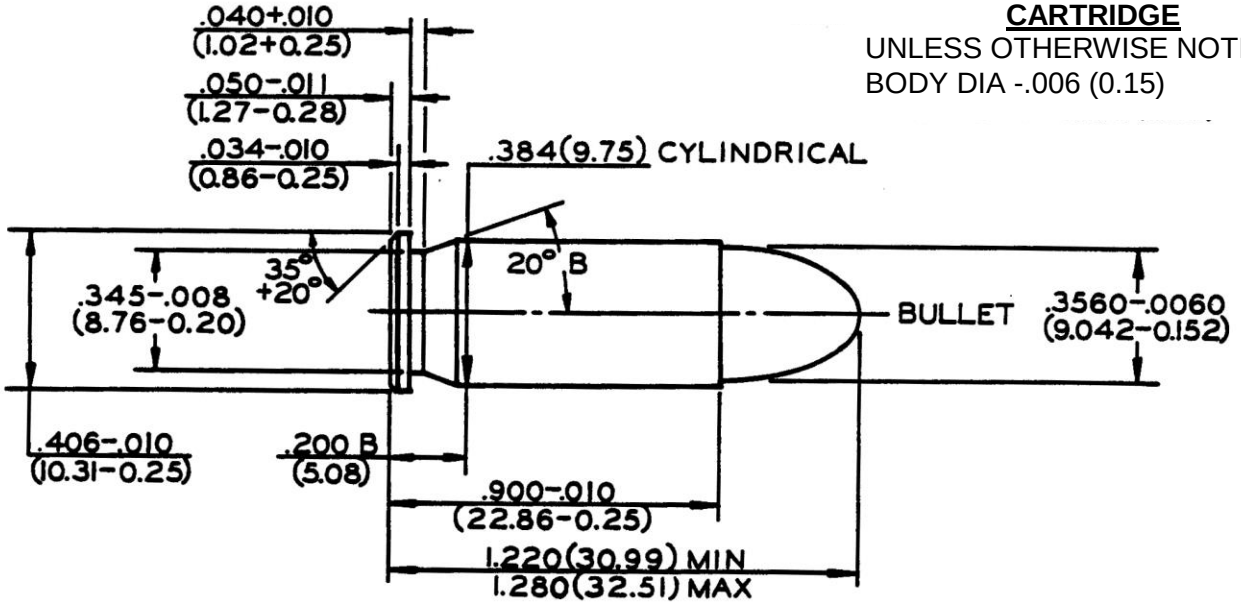

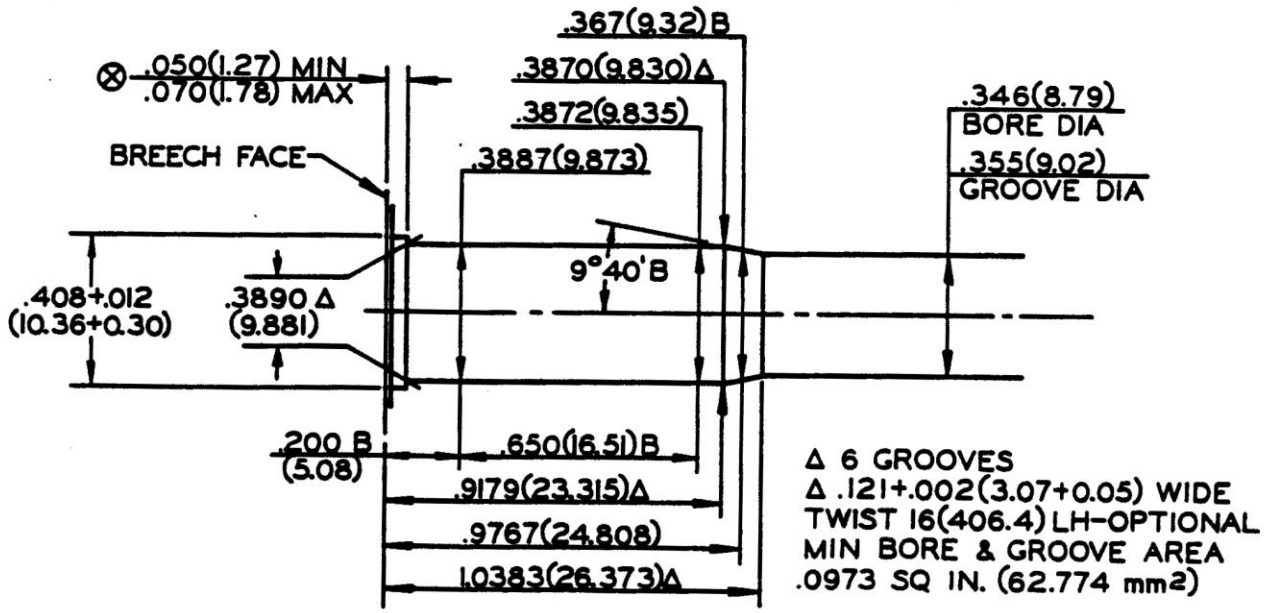

CARTRIDGE
UNLESS OTHERWISE NOTED
BODY DIA -.006 (0.15)

CHAMBER
UNLESS OTHERWISE NOTED
ALL DIA +.004 (0.10)
LENGTH TOL +.015 (0.38)

NOTE
B = BASIC
Δ = REFERENCE DIMENSION
⊗ = HEADSPACE DIMENSION
(XX.XX) = MILLIMETERS
✻= DIMENSIONS TO INTERSECTIONS OF LINES
ALL CALCULATIONS APPLY AT MAXIMUM MATERIAL CONDITION (MMC)

CARTRIDGE AND CHAMBER DRAWING
380 AUTOMATIC

Note: This drawing is subject to change.
Current version is available at www.saami.org.

CARTRIDGE

UNLESS OTHERWISE NOTED
BODY DIA -.006 (0.15)

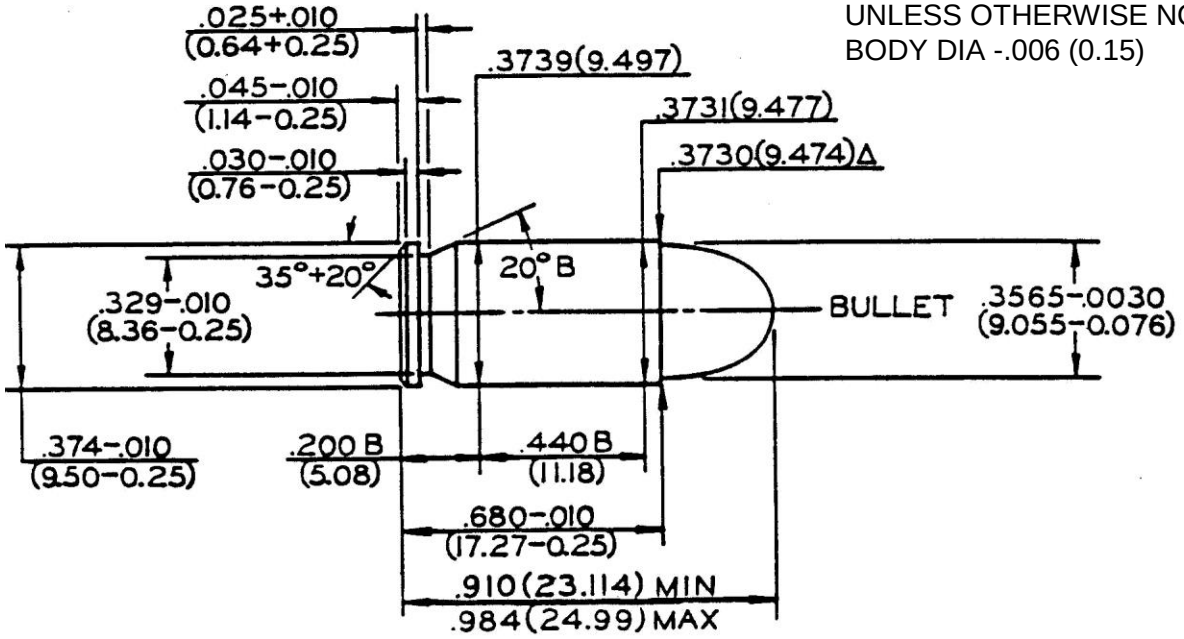

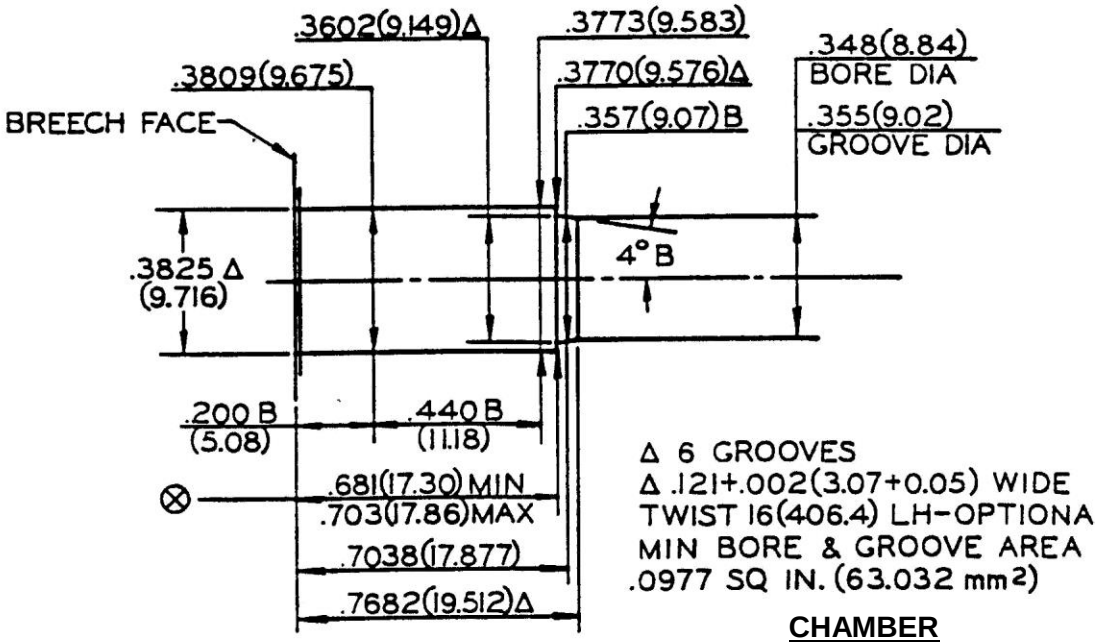

CHAMBER

UNLESS OTHERWISE NOTED
ALL DIA +.004 (0.10)
LENGTH TOL +.015 (0.38)

NOTE

B = BASIC
Δ = REFERENCE DIMENSION
⊗ = HEADSPACE DIMENSION
(XX.XX) = MILLIMETERS
✻= DIMENSIONS TO INTERSECTIONS OF LINES
ALL CALCULATIONS APPLY AT MAXIMUM MATERIAL CONDITION (MMC)

Note: This drawing is subject to change.
Current version is available at www.saami.org.

SAAMI
Sporting Arms and Ammunition Manufacturers' Institute, Inc.
Since 1926

MAXIMUM CARTRIDGE / MINIMUM CHAMBER

40 SMITH & WESSON

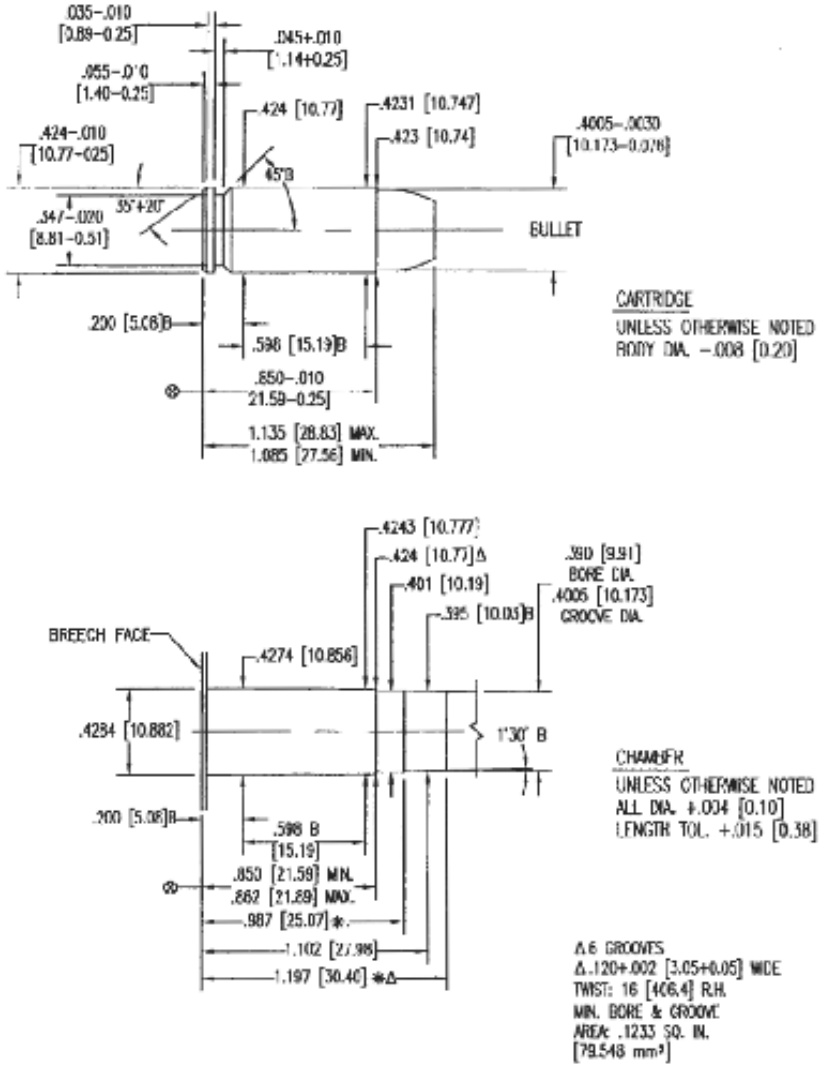

NOTE:
B=BASIC
[XX.XX]=MILLIMETERS
⊗= HEADSPACE DIMENSION
Δ= REFERENCE DIMENSION
*DIMENSIONS ARE TO INTERSECTION OF LINES
ALL CALCULATIONS APPLY AT MAXIMUM MATERIAL CONDITION (MMC)

COPYRIGHT © SPORTING ARMS AND AMMUNITION MANUFACTURERS' INSTITUTE, INC. ("SAAMI"). ALL RIGHTS RESERVED.
Reproduction, republication or redistribution of SAAMI technical drawings and data sheets in any manner, in whole or in part, without SAAMI's prior written consent is prohibited.

Note: This drawing is subject to change.
Current version is available at www.saami.org.

SAAMI
SPORTING ARMS AND AMMUNITION MANUFACTURERS' INSTITUTE, INC.
Since 1926

MAXIMUM CARTRIDGE / MINIMUM CHAMBER

400 COR-BON

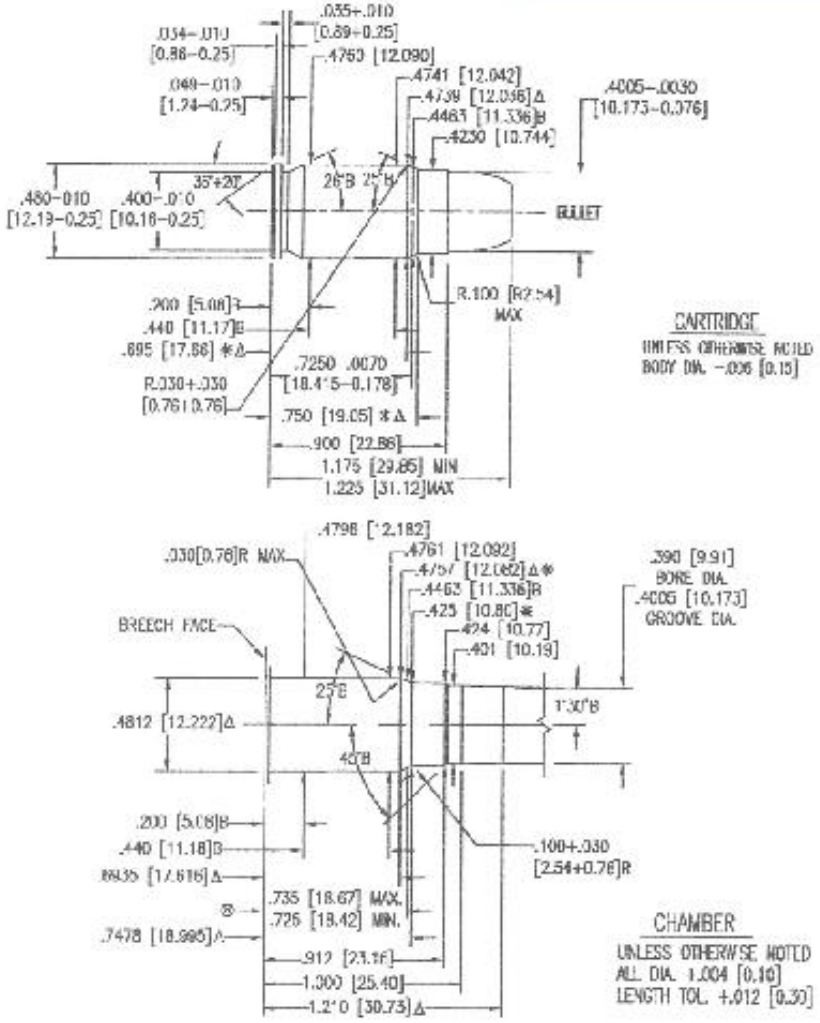

NOTE
B–BASIC
[XX.XX]–MILLIMETERS
⊗– HEADSPACE DIMENSION
Δ = REFERENCE DIMENSION
*DIMENSIONS ARE TO INTERSECTION OF LINES
ALL CALCULATIONS APPLY AT MAXIMUM
MATERIAL CONDITION (MMC)

COPYRIGHT © SPORTING ARMS AND AMMUNITION MANUFACTURERS' INSTITUTE, INC. ("SAAMI"). ALL RIGHTS RESERVED.
Reproduction, republication or redistribution of SAAMI technical drawings and data sheets in any manner, in whole or in part, without SAAMI's prior written consent is prohibited.

CARTRIDGE AND CHAMBER DRAWING
41 REMINGTON MAGNUM

Note: This drawing is subject to change.
Current version is available at www.saami.org.

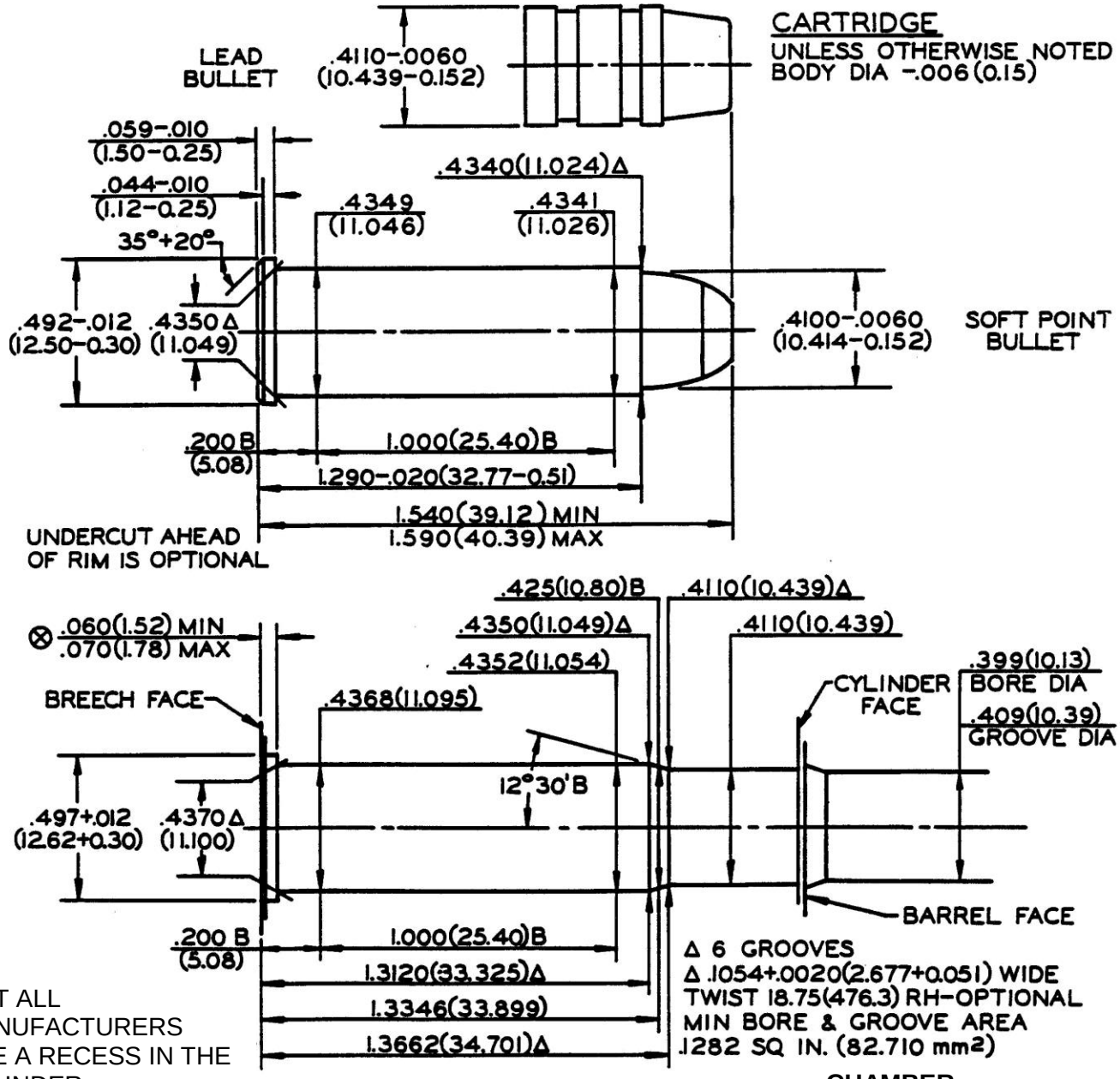

CHAMBER

UNLESS OTHERWISE NOTED
ALL DIA +.004 (0.10)
LENGTH TOL +.015 (0.38)

NOTE

B = BASIC
Δ = REFERENCE DIMENSION
⊗ = HEADSPACE DIMENSION
(XX.XX) = MILLIMETERS
∗= DIMENSIONS TO INTERSECTIONS OF LINES
ALL CALCULATIONS APPLY AT MAXIMUM MATERIAL CONDITION (MMC)

CARTRIDGE AND CHAMBER DRAWING
44 REMINGTON MAGNUM

Note: This drawing is subject to change.
Current version is available at www.saami.org.

CARTRIDGE

UNLESS OTHERWISE NOTED
BODY DIA -.006 (0.15)

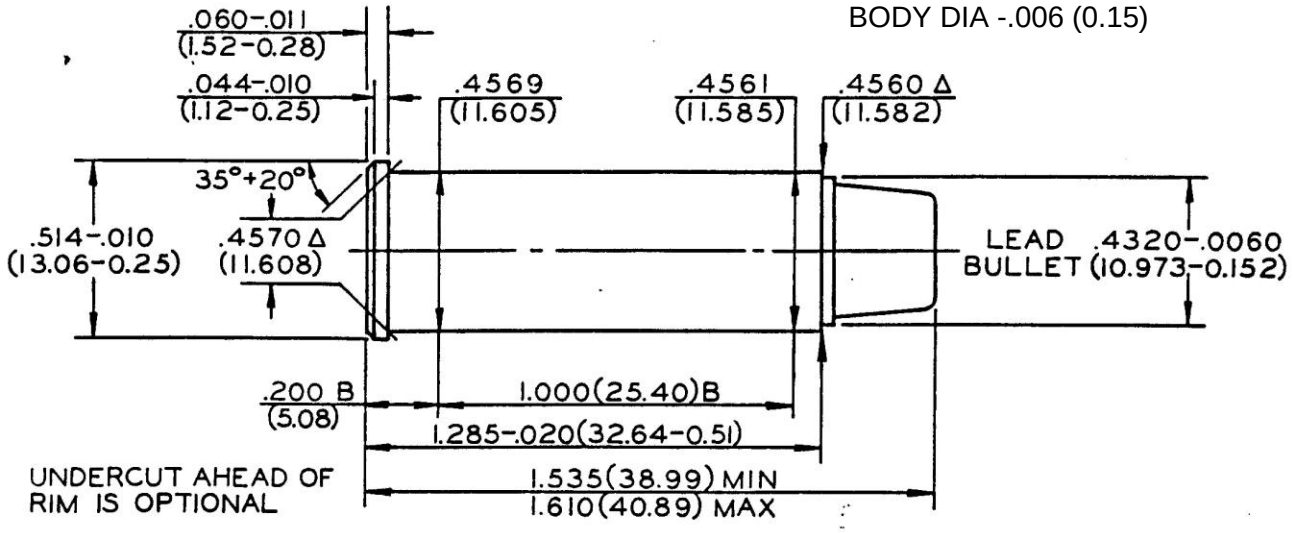

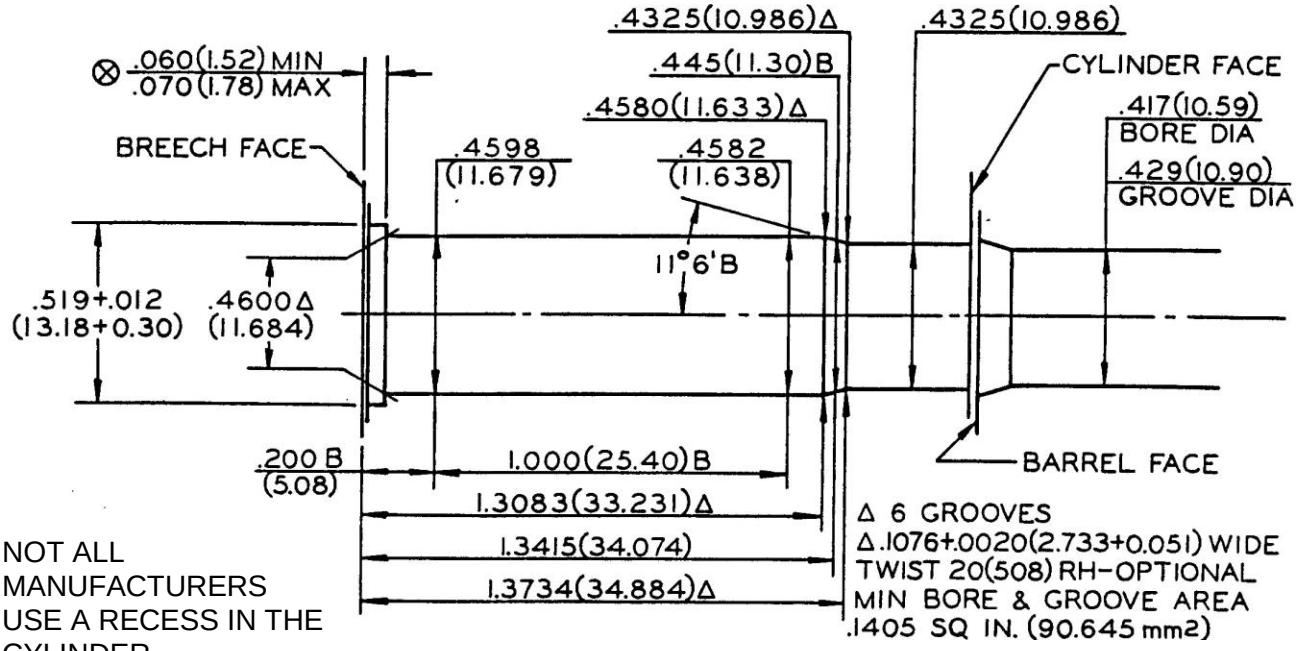

NOT ALL
MANUFACTURERS
USE A RECESS IN THE
CYLINDER

CHAMBER

UNLESS OTHERWISE NOTED
ALL DIA +.004 (0.10)
LENGTH TOL +.015 (0.38)

NOTE

B = BASIC
Δ = REFERENCE DIMENSION
⊗ = HEADSPACE DIMENSION
(XX.XX) = MILLIMETERS
✻= DIMENSIONS TO INTERSECTIONS OF LINES
ALL CALCULATIONS APPLY AT MAXIMUM MATERIAL CONDITION (MMC)

CARTRIDGE AND CHAMBER DRAWING
44 SMITH & WESSON SPECIAL

Note: This drawing is subject to change.
Current version is available at www.saami.org.

CARTRIDGE

UNLESS OTHERWISE NOTED
BODY DIA -.006 (0.15)

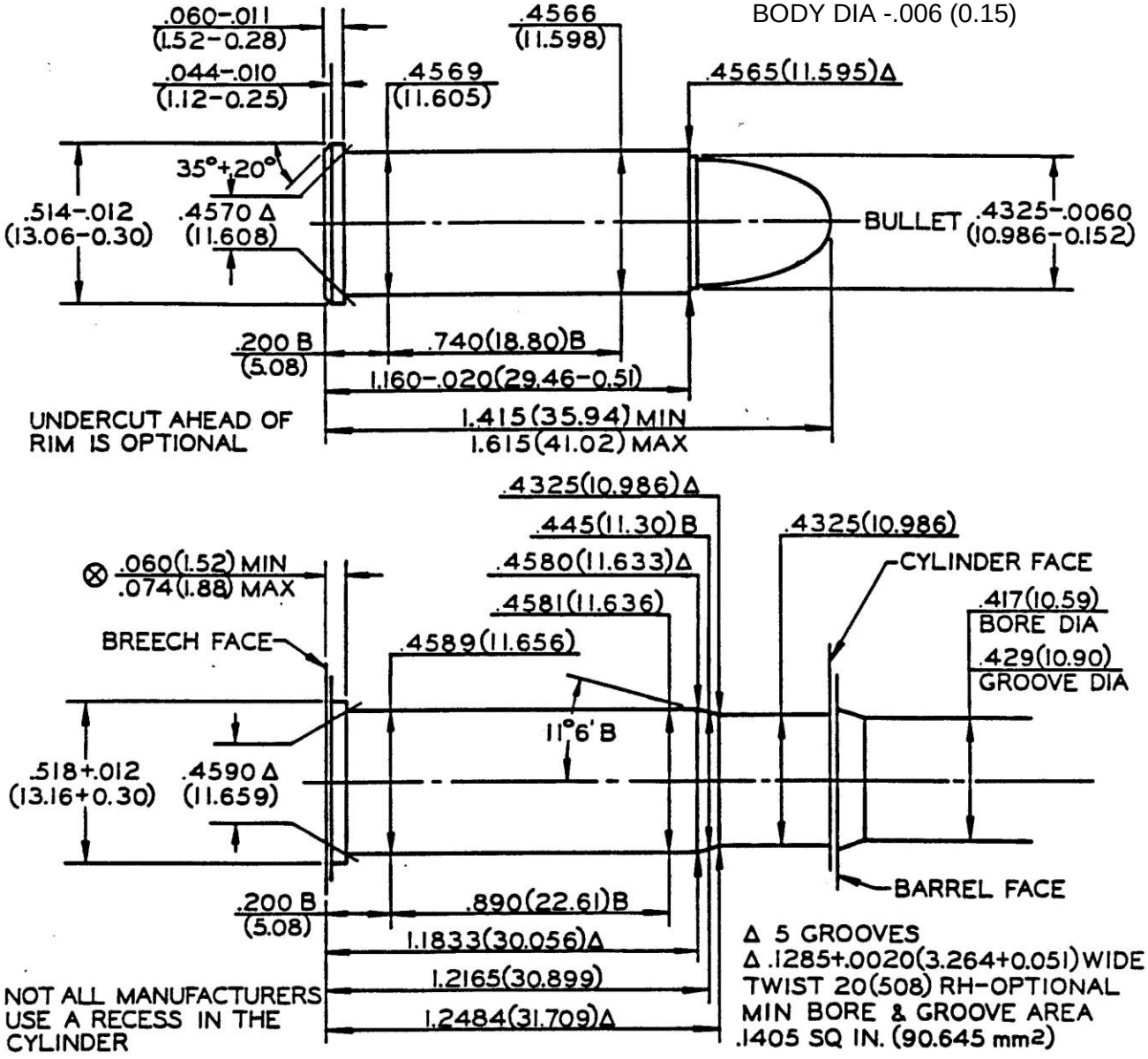

CHAMBER

UNLESS OTHERWISE NOTED
ALL DIA +.004 (0.10)
LENGTH TOL +.015 (0.38)

NOTE

B = BASIC
Δ = REFERENCE DIMENSION
⊗ = HEADSPACE DIMENSION
(XX.XX) = MILLIMETERS
✻= DIMENSIONS TO INTERSECTIONS OF LINES
ALL CALCULATIONS APPLY AT MAXIMUM MATERIAL CONDITION (MMC)

CARTRIDGE AND CHAMBER DRAWING
45 AUTOMATIC / 45 AUTOMATIC +P

Note: This drawing is subject to change.
Current version is available at www.saami.org.

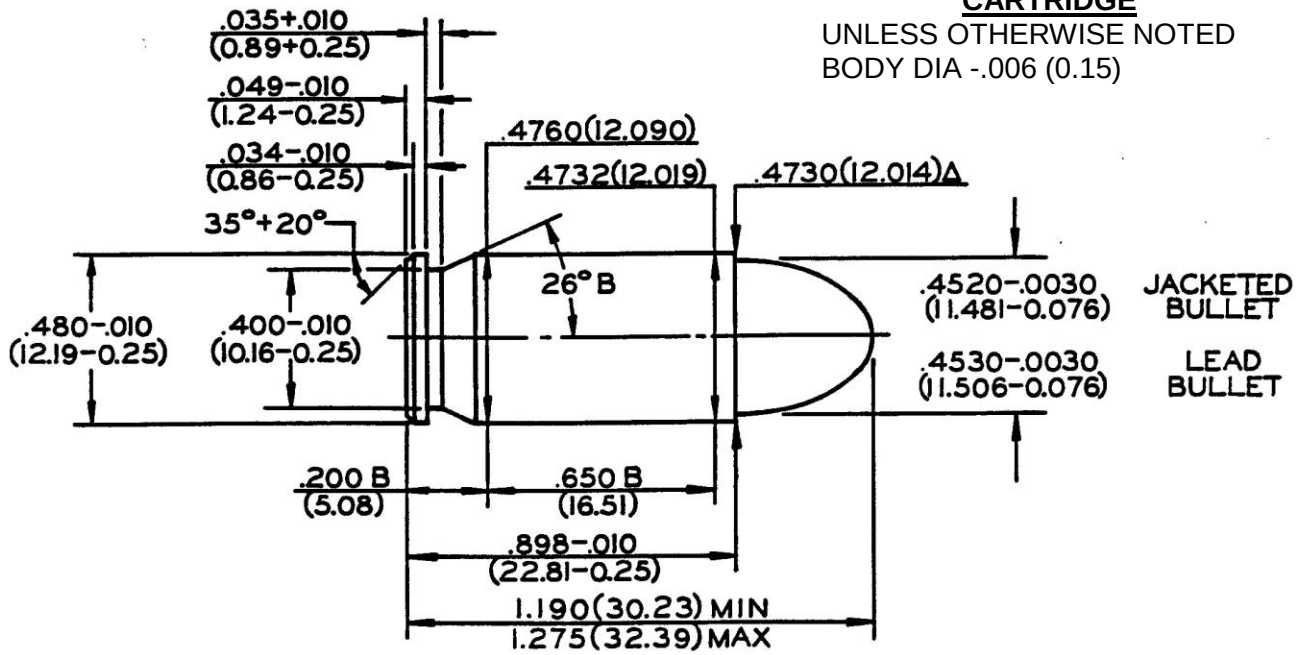

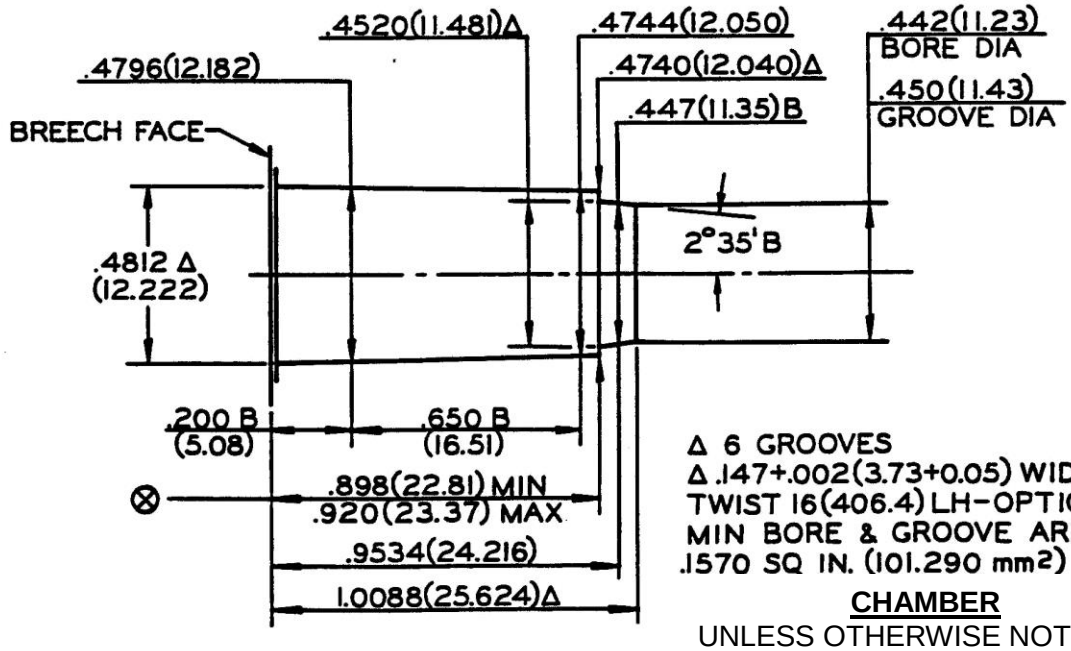

Δ 6 GROOVES
Δ .147+.002(3.73+0.05) WIDE
TWIST 16(406.4) LH–OPTIONAL
MIN BORE & GROOVE AREA
.1570 SQ IN. (101.290 mm²)

CHAMBER

UNLESS OTHERWISE NOTED
ALL DIA +.004 (0.10)
LENGTH TOL +.015 (0.38)

NOTE

B = BASIC
Δ = REFERENCE DIMENSION
⊗ = HEADSPACE DIMENSION
(XX.XX) = MILLIMETERS
✻= DIMENSIONS TO INTERSECTIONS OF LINES
ALL CALCULATIONS APPLY AT MAXIMUM MATERIAL CONDITION (MMC)

CARTRIDGE AND CHAMBER DRAWING
45 AUTOMATIC MATCH

Note: This drawing is subject to change.
Current version is available at www.saami.org.

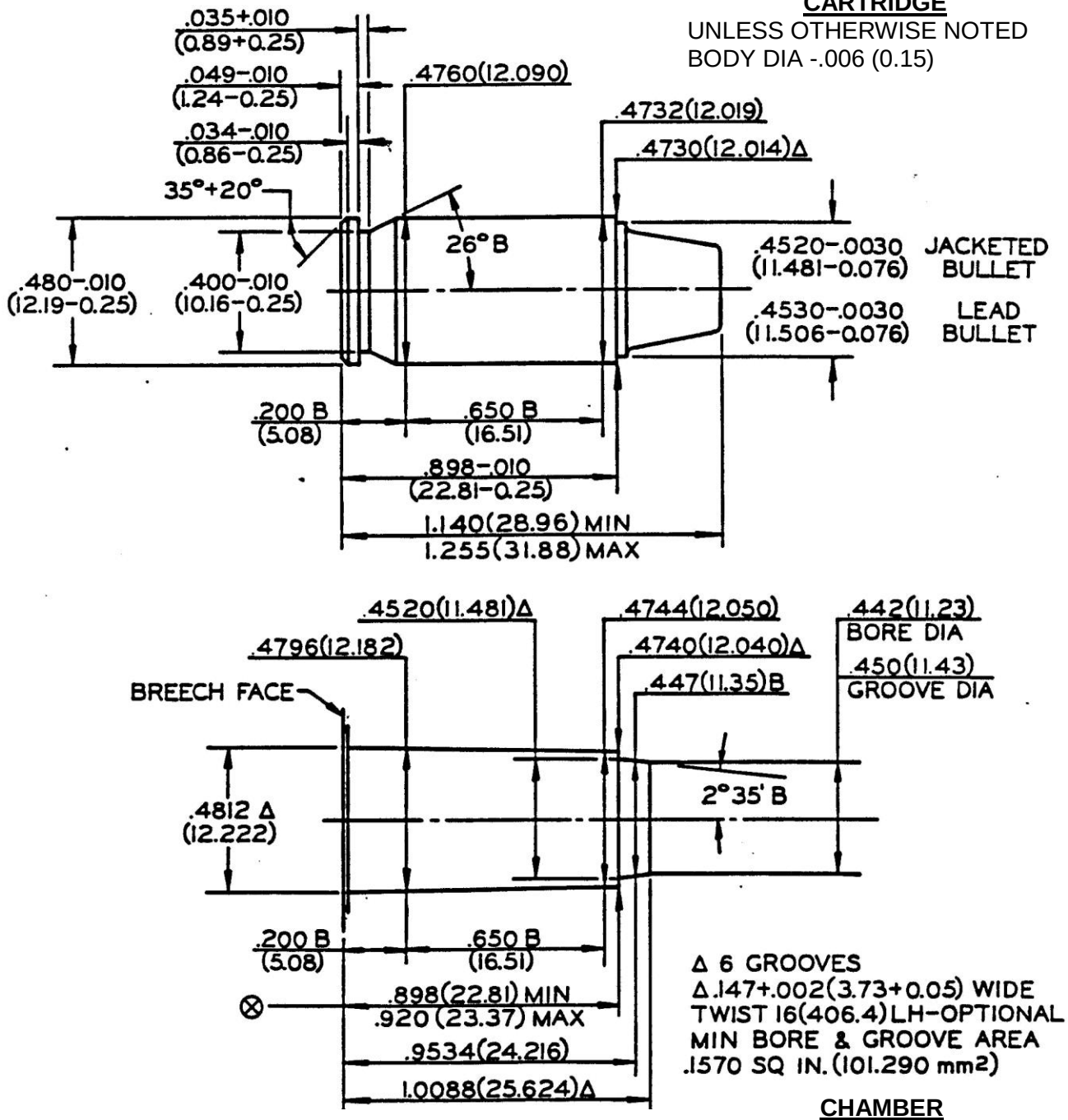

CARTRIDGE
UNLESS OTHERWISE NOTED
BODY DIA -.006 (0.15)

CHAMBER
UNLESS OTHERWISE NOTED
ALL DIA +.004 (0.10)
LENGTH TOL +.015 (0.38)

NOTE
B = BASIC
Δ = REFERENCE DIMENSION
⊗ = HEADSPACE DIMENSION
(XX.XX) = MILLIMETERS
✻= DIMENSIONS TO INTERSECTIONS OF LINES
ALL CALCULATIONS APPLY AT MAXIMUM MATERIAL CONDITION (MMC)

CARTRIDGE AND CHAMBER DRAWING
45 AUTO RIM

Note: This drawing is subject to change.
Current version is available at www.saami.org.

CARTRIDGE
UNLESS OTHERWISE NOTED
BODY DIA -.006 (0.15)

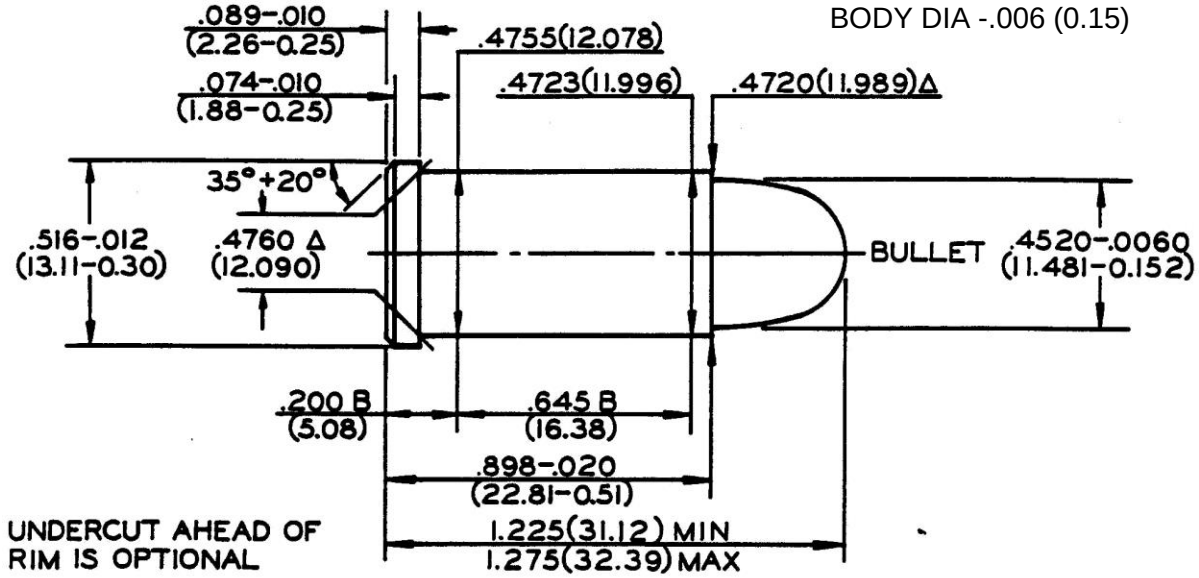

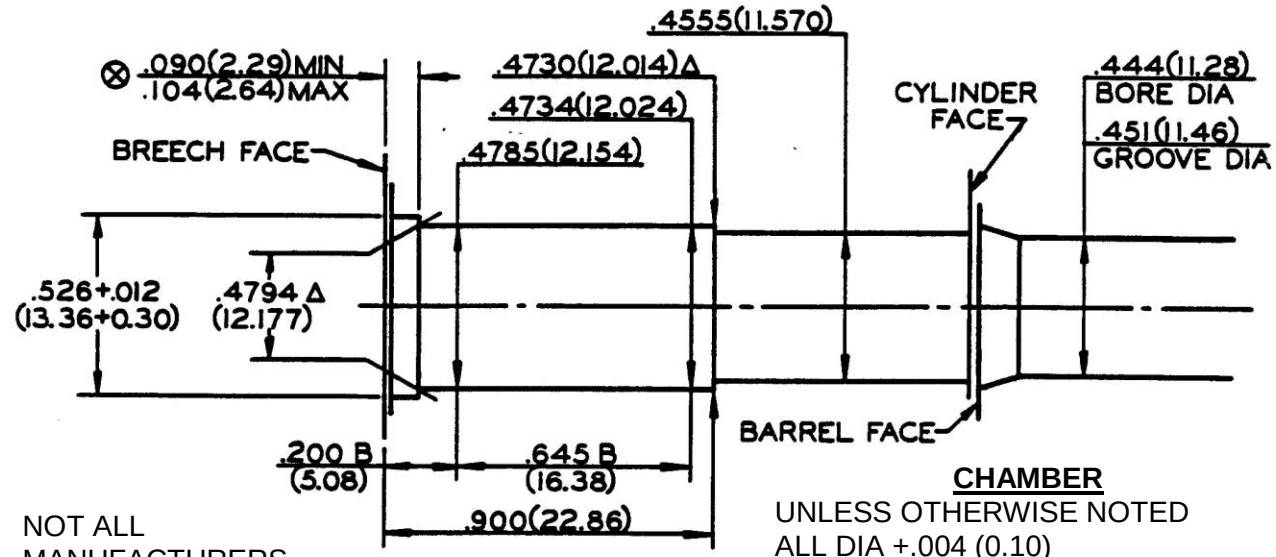

NOT ALL
MANUFACTURERS
USE A RECESS IN THE
CYLINDER

CHAMBER
UNLESS OTHERWISE NOTED
ALL DIA +.004 (0.10)
LENGTH TOL +.015 (0.38)

Δ 6 GROOVES
Δ .156+.002 (3.96+0.05) WIDE
TWIST 16.00 (406.4) LH – OPTIONAL
MIN. BORE & GROOVE AREA:
.1582 IN^2 (102.064 mm^2)

NOTE
B = BASIC
Δ = REFERENCE DIMENSION
⊗ = HEADSPACE DIMENSION
(XX.XX) = MILLIMETERS
✻= DIMENSIONS TO INTERSECTIONS OF LINES
ALL CALCULATIONS APPLY AT MAXIMUM MATERIAL CONDITION (MMC)

CARTRIDGE AND CHAMBER DRAWING
45 COLT

Note: This drawing is subject to change.
Current version is available at www.saami.org.

CARTRIDGE
UNLESS OTHERWISE NOTED
BODY DIA -.006 (0.15)

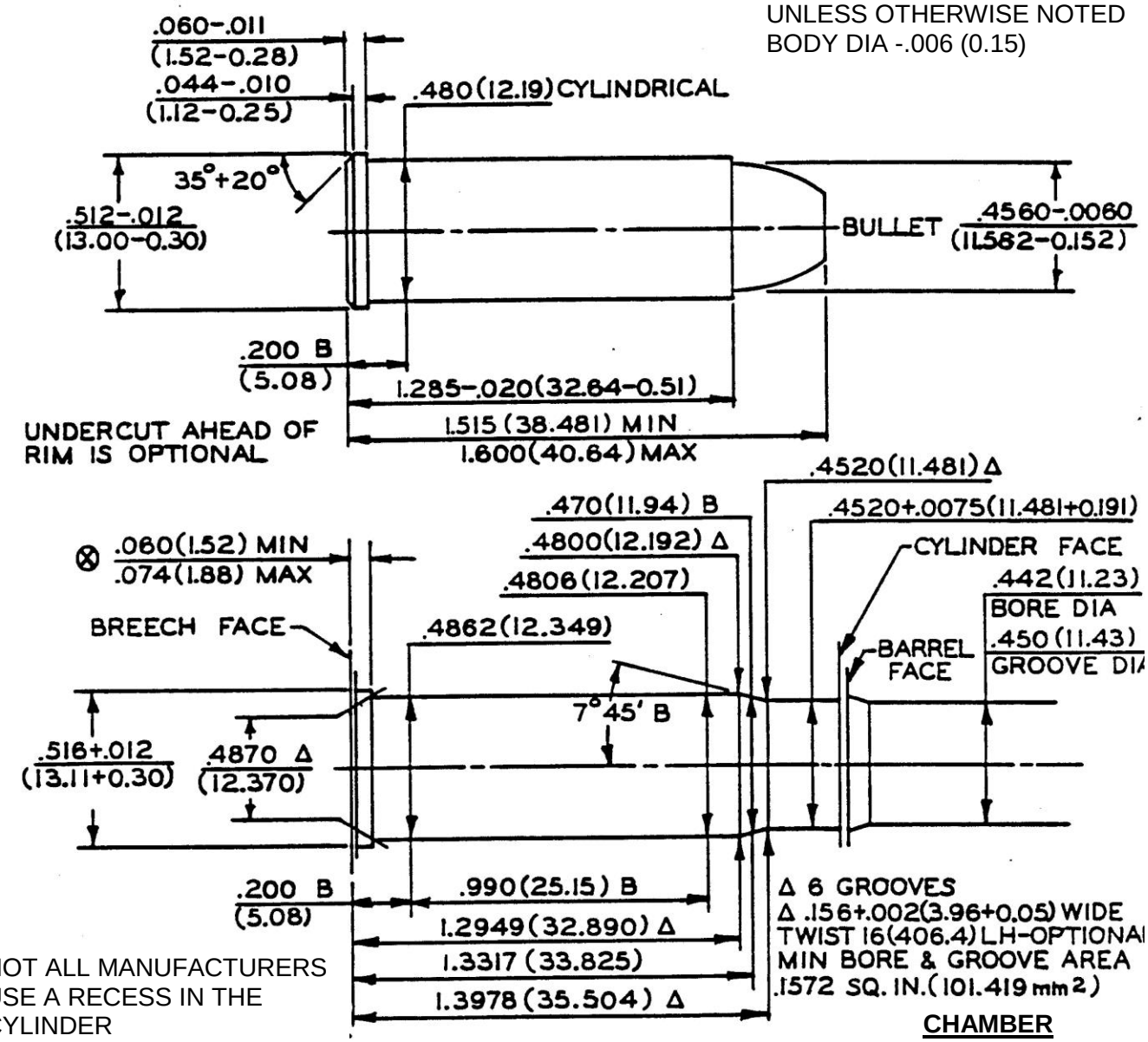

NOT ALL MANUFACTURERS USE A RECESS IN THE CYLINDER

CHAMBER
UNLESS OTHERWISE NOTED
ALL DIA +.004 (0.10)
LENGTH TOL +.015 (0.38)

NOTE
B = BASIC
Δ = REFERENCE DIMENSION
⊗ = HEADSPACE DIMENSION
(XX.XX) = MILLIMETERS
✻= DIMENSIONS TO INTERSECTIONS OF LINES
ALL CALCULATIONS APPLY AT MAXIMUM MATERIAL CONDITION (MMC)

CARTRIDGE AND CHAMBER DRAWING
45 GLOCK AUTOMATIC PISTOL

Note: This drawing is subject to change.
Current version is available at www.saami.org.

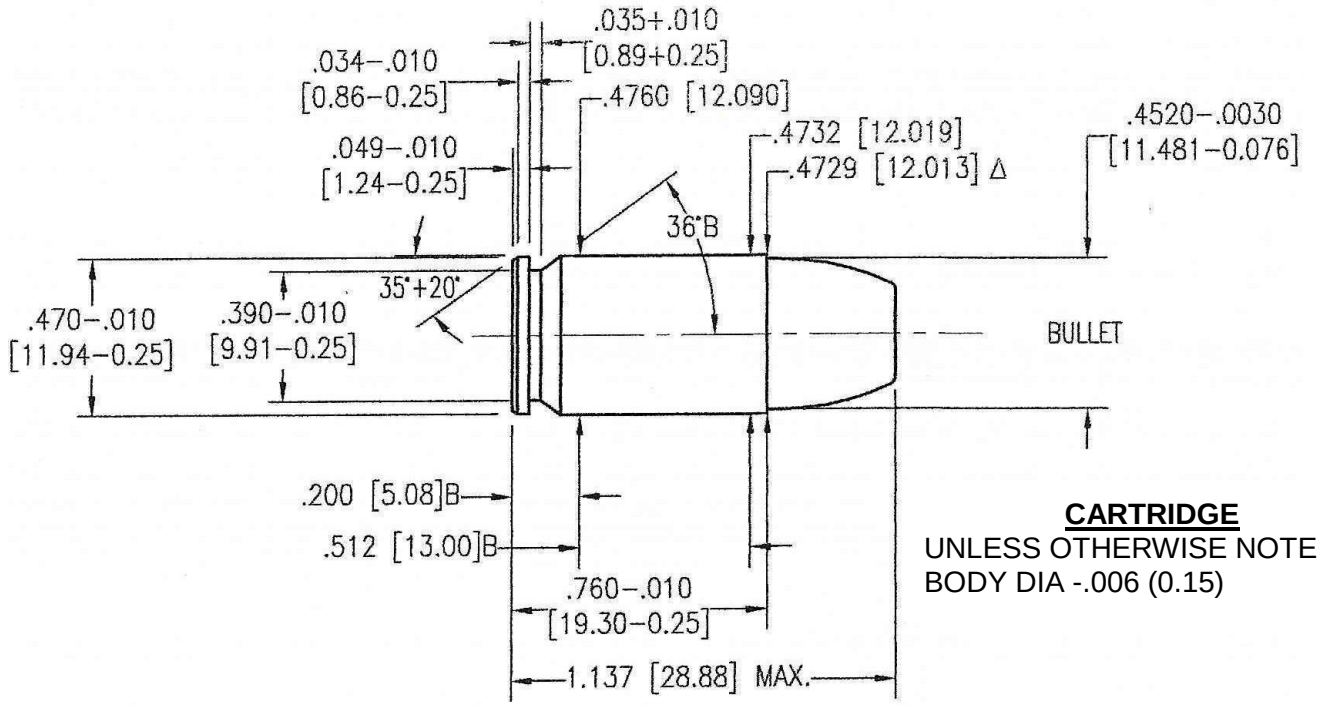

CARTRIDGE
UNLESS OTHERWISE NOTED
BODY DIA -.006 (0.15)

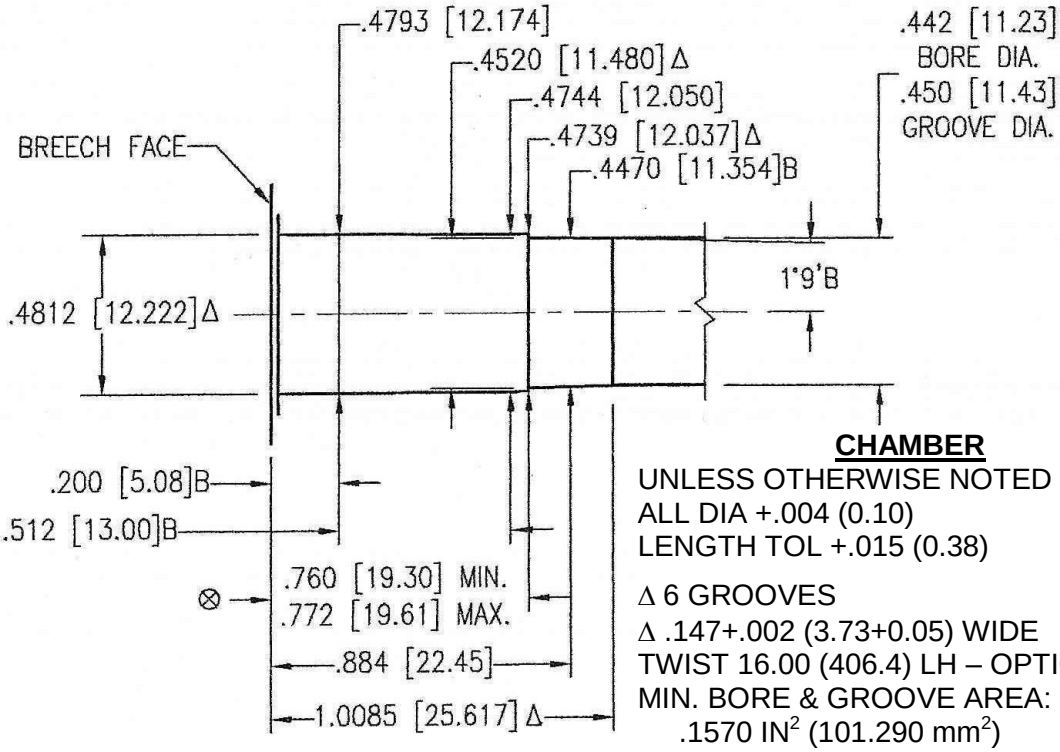

CHAMBER
UNLESS OTHERWISE NOTED
ALL DIA +.004 (0.10)
LENGTH TOL +.015 (0.38)

Δ 6 GROOVES
Δ .147+.002 (3.73+0.05) WIDE
TWIST 16.00 (406.4) LH – OPTIONAL
MIN. BORE & GROOVE AREA:
.1570 IN^2 (101.290 mm^2)

NOTE
B = BASIC
Δ = REFERENCE DIMENSION
⊗ = HEADSPACE DIMENSION
(XX.XX) = MILLIMETERS
✻= DIMENSIONS TO INTERSECTIONS OF LINES
ALL CALCULATIONS APPLY AT MAXIMUM MATERIAL CONDITION (MMC)

CARTRIDGE AND CHAMBER DRAWING
45 WINCHESTER MAGNUM

Note: This drawing is subject to change.
Current version is available at www.saami.org.

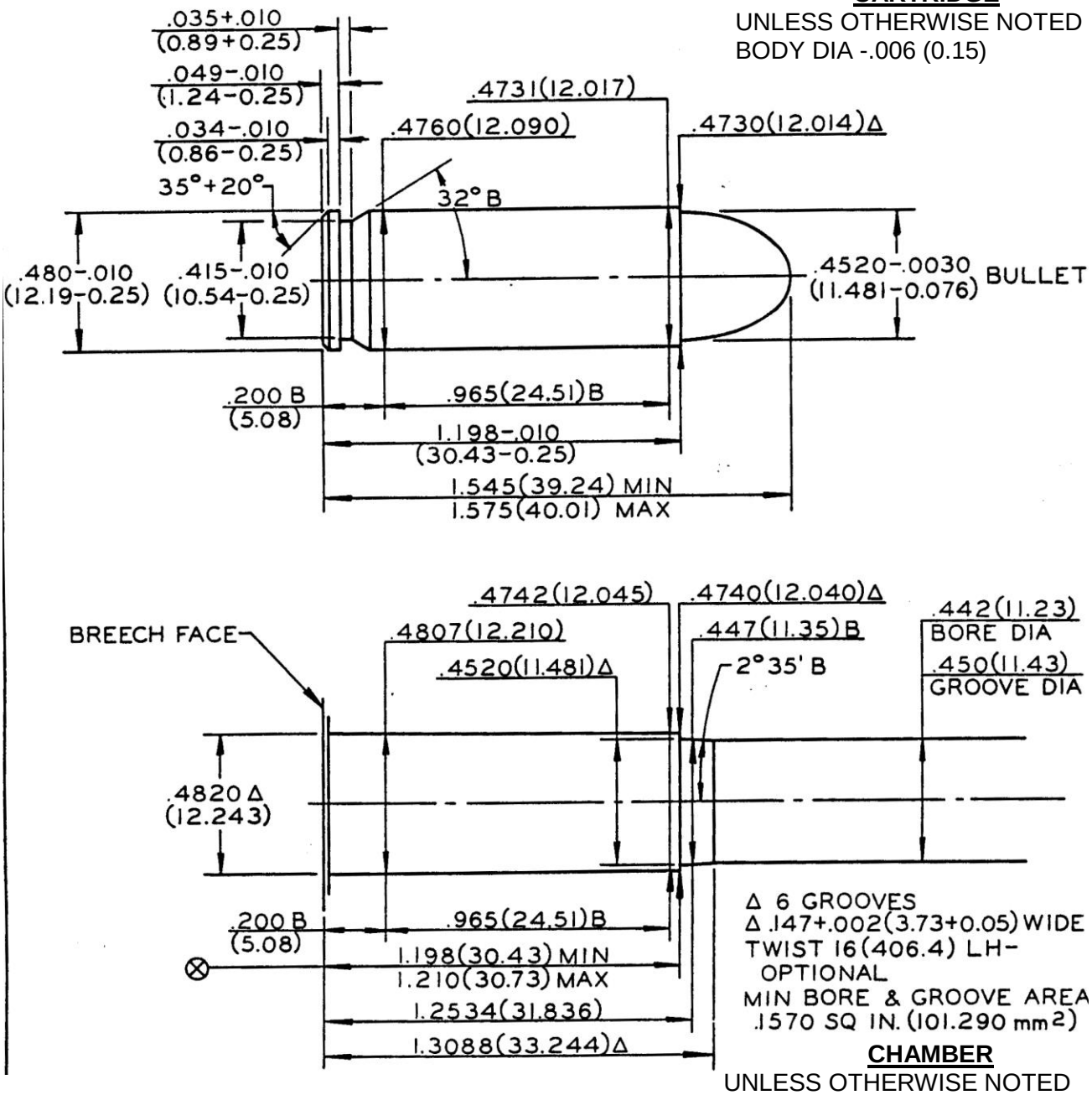

CARTRIDGE
UNLESS OTHERWISE NOTED
BODY DIA -.006 (0.15)

CHAMBER
UNLESS OTHERWISE NOTED
ALL DIA +.004 (0.10)
LENGTH TOL +.015 (0.38)

NOTE
B = BASIC
Δ = REFERENCE DIMENSION
⊗ = HEADSPACE DIMENSION
(XX.XX) = MILLIMETERS
✻= DIMENSIONS TO INTERSECTIONS OF LINES
ALL CALCULATIONS APPLY AT MAXIMUM MATERIAL CONDITION (MMC)

Note: This drawing is subject to change.
Current version is available at www.saami.org.

SAAMI
Sporting Arms and Ammunition Manufacturers' Institute, Inc.
Since 1926

MAXIMUM CARTRIDGE / MINIMUM CHAMBER

454 CASULL

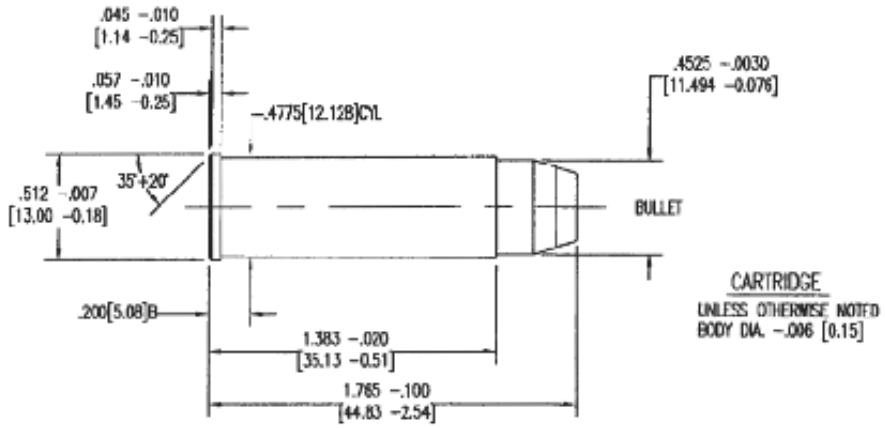

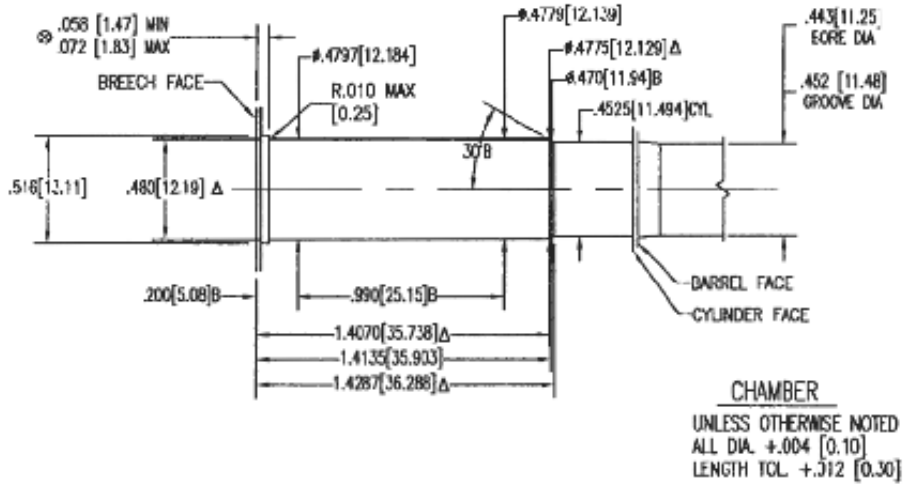

Δ 6 GROOVES
Δ .160+.002 [4.06+0.05] WIDE
TWIST: 24.000±.125 [609.6±3.'8] R.H.
MIN. BORE & GROOVE
AREA: .1585 SQ. IN.
[102.257 mm²]

NOTE:
B=BASIC
[XX.XX]=MILLIMETERS
⊗= HEADSPACE DIMENSION
Δ= REFERENCE DIMENSION
*DIMENSIONS ARE TO INTERSECTION OF LINES
ALL CALCULATIONS APPLY AT MAXIMUM
MATERIAL CONDITION (MMC)

COPYRIGHT © SPORTING ARMS AND AMMUNITION MANUFACTURERS' INSTITUTE, INC. ("SAAMI"). ALL RIGHTS RESERVED.
Reproduction, republication or redistribution of SAAMI technical drawings and data sheets in any manner, in whole or in part, without SAAMI's prior written consent is prohibited.

Note: This drawing is subject to change.
Current version is available at www.saami.org.

SAAMI
Sporting Arms and Ammunition Manufacturers' Institute, Inc.
Since 1926

MAXIMUM CARTRIDGE / MINIMUM CHAMBER

460 SMITH & WESSON MAGNUM

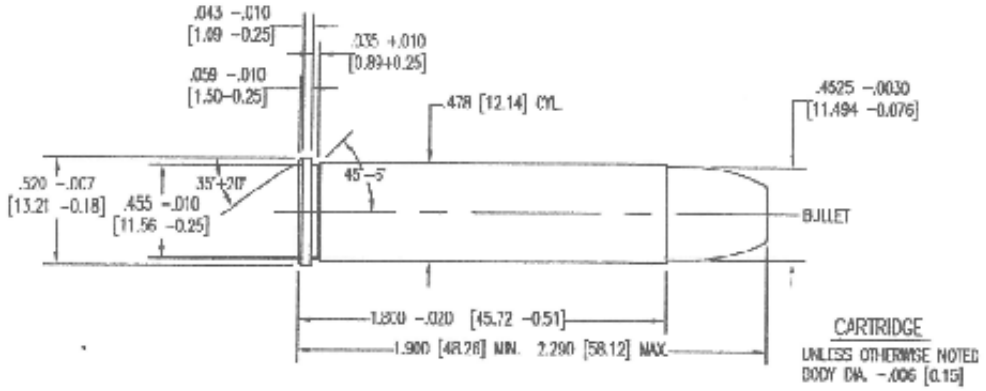

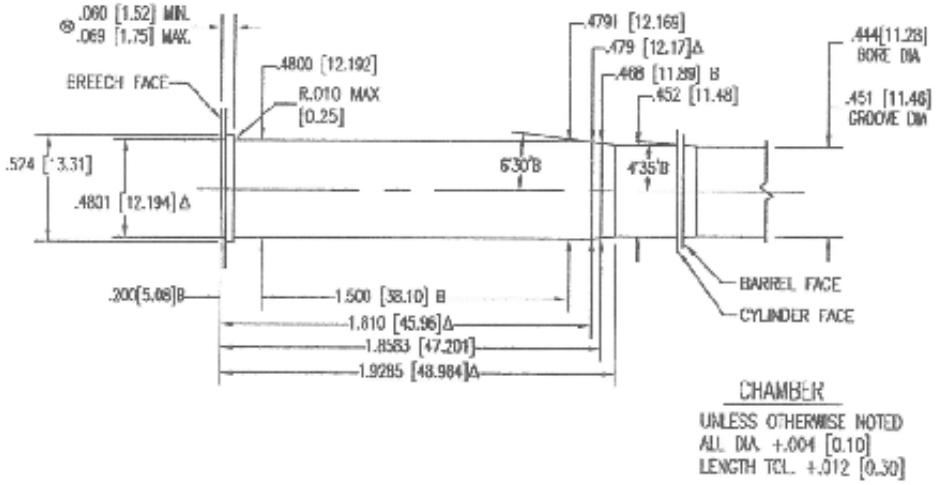

Δ 5 GROOVES
Δ .144+.003 [3.66+0.08] WIDE
TWIST: 20 [508.0] R.H. OPTIONAL
MIN. BORE & GROOVE
AREAc .1572 SQ. IN.
[101.419 mm²]

NOTE:
B=BASIC
[XX.XX]=MILLIMETERS
⊗= HEADSPACE DIMENSION
Δ= REFERENCE DIMENSION
*DIMENSIONS ARE TO INTERSECTION OF LINES
ALL CALCULATIONS APPLY AT MAXIMUM MATERIAL CONDITION (MMC)

COPYRIGHT © SPORTING ARMS AND AMMUNITION MANUFACTURERS' INSTITUTE, INC. ("SAAMI"). ALL RIGHTS RESERVED.
Reproduction, republication or redistribution of SAAMI technical drawings and data sheets in any manner, in whole or in part, without SAAMI's prior written consent is prohibited.

Note: This drawing is subject to change.
Current version is available at www.saami.org.

SAAMI
Sporting Arms and Ammunition Manufacturers' Institute, Inc.
Since 1926

MAXIMUM CARTRIDGE / MINIMUM CHAMBER

475 LINEBAUGH

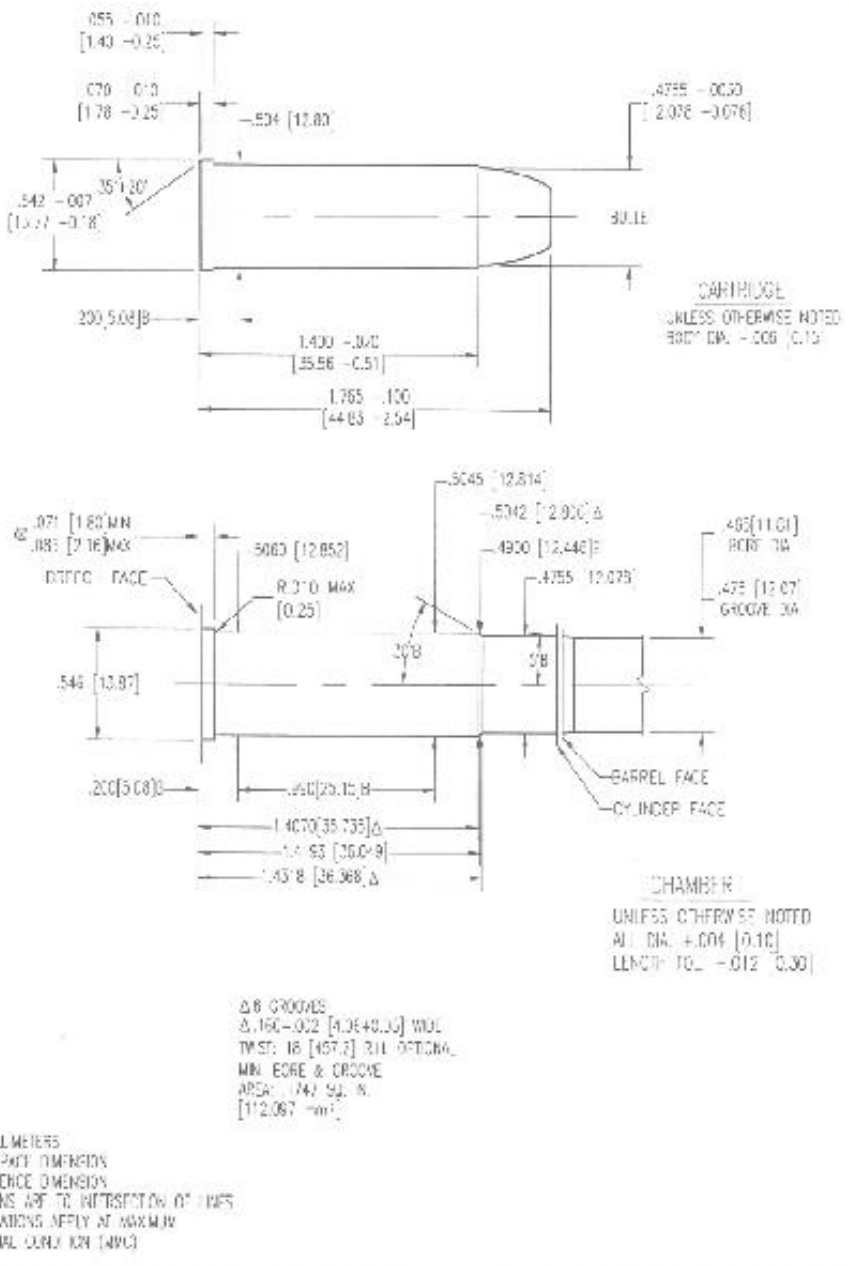

COPYRIGHT © SPORTING ARMS AND AMMUNITION MANUFACTURERS' INSTITUTE, INC. ("SAAMI"). ALL RIGHTS RESERVED.
Reproduction, republication or redistribution of SAAMI technical drawings and data sheets in any manner, in whole or in part, without SAAMI's prior written consent is prohibited.

Note: This drawing is subject to change.
Current version is available at www.saami.org.

SAAMI
Sporting Arms and Ammunition Manufacturers' Institute, Inc.
Since 1926

MAXIMUM CARTRIDGE / MINIMUM CHAMBER

480 RUGER

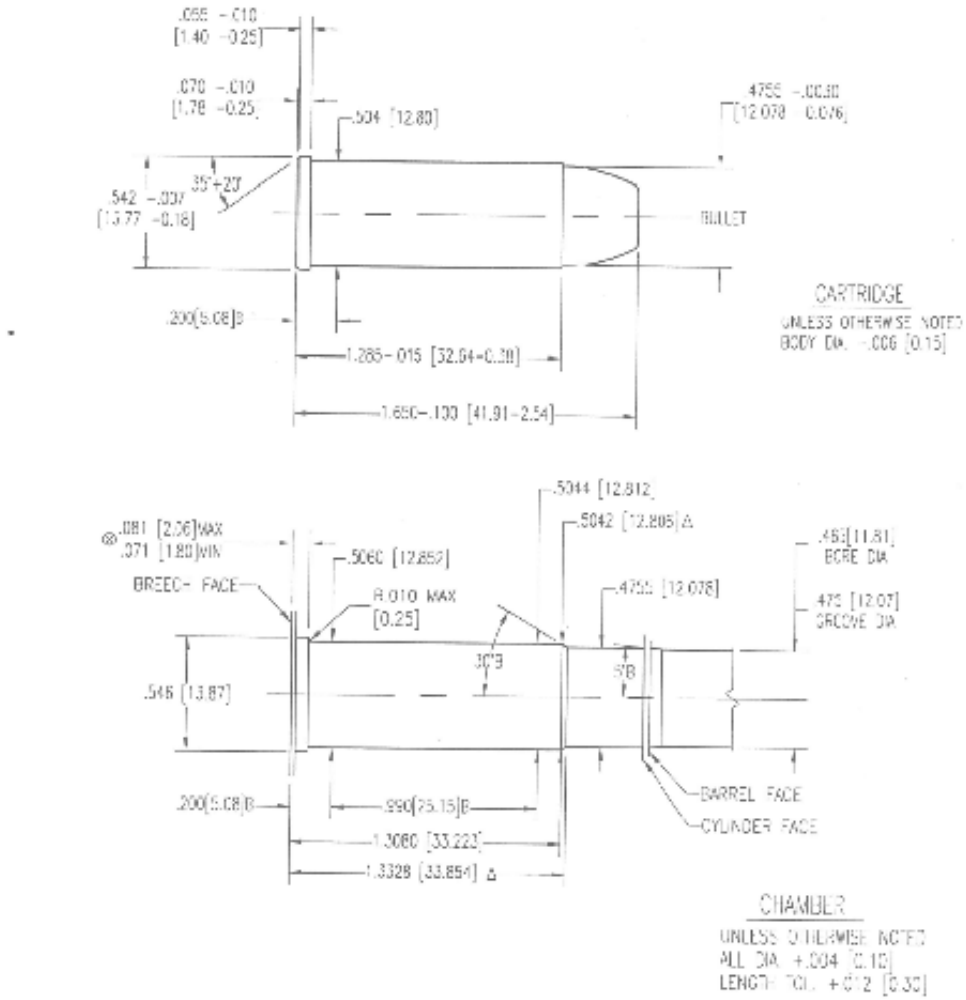

Δ 6 GROOVES
Δ.1604+.002 [4.06-0.05] WIDE
TWIST: 18 [457.2] R.H. OPTIONAL
MIN. BORE & GROOVE
AREA: .1747 SQ. IN.
[112.709 mm²]

NOTE:
B=BASIC
.XXXX[=MILLIMETERS
S= HEADSPACE DIMENSION
Δ= REFERENCE DIMENSION
*DIMENSIONS ARE TO INTERSECTION OF LINES
ALL CALCULATIONS APPLY AT MAXIMUM
MATERIAL CONDITION (MMC)

COPYRIGHT © SPORTING ARMS AND AMMUNITION MANUFACTURERS' INSTITUTE, INC. ("SAAMI"). ALL RIGHTS RESERVED.
Reproduction, republication or redistribution of SAAMI technical drawings and data sheets in any manner, in whole or in part, without SAAMI's prior written consent is prohibited.

Note: This drawing is subject to change.
Current version is available at www.saami.org.

SAAMI
Sporting Arms and Ammunition Manufacturers' Institute, Inc.
Since 1926

MAXIMUM CARTRIDGE / MINIMUM CHAMBER

50 ACTION EXPRESS

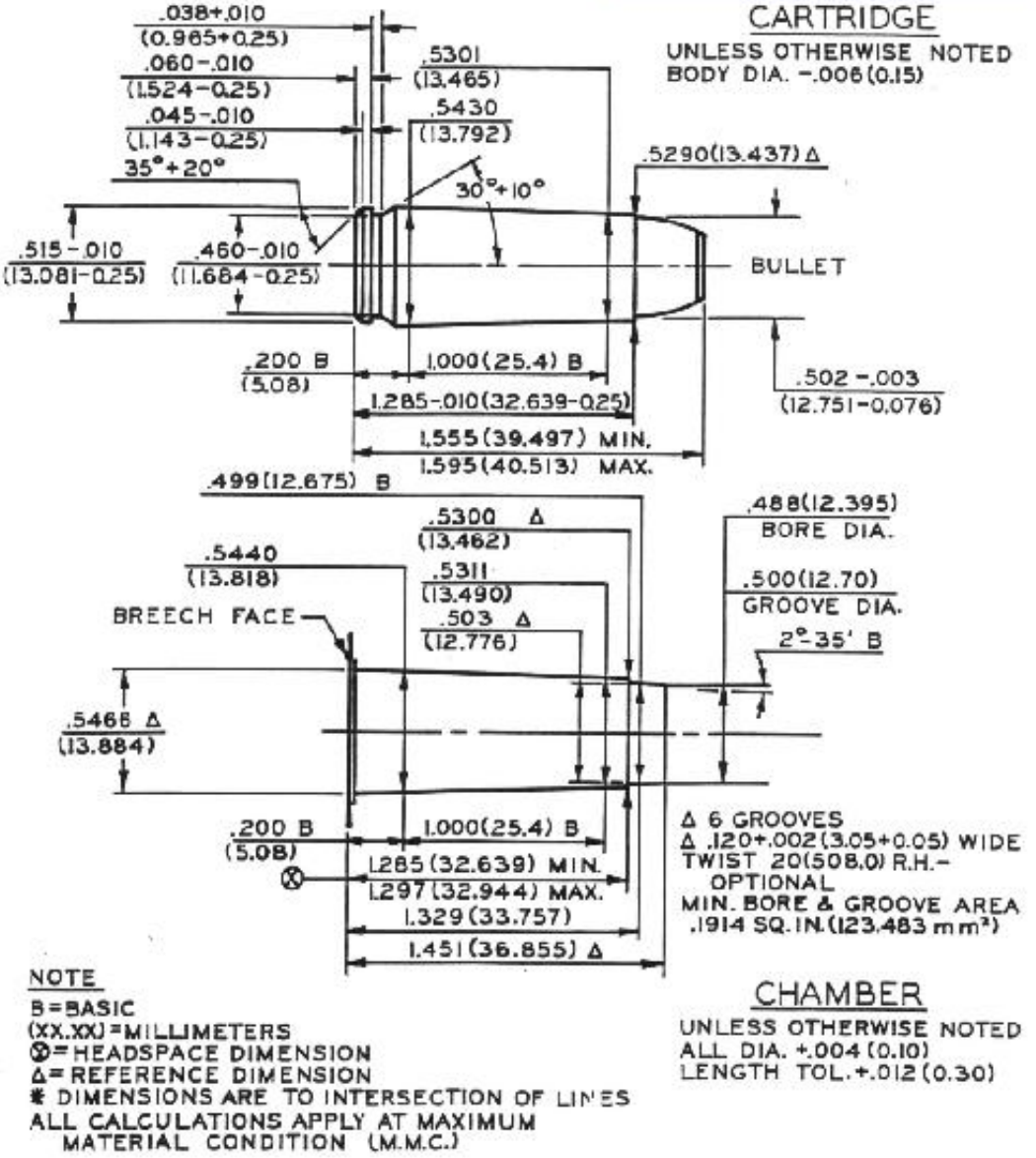

COPYRIGHT © SPORTING ARMS AND AMMUNITION MANUFACTURERS' INSTITUTE, INC. ("SAAMI"). ALL RIGHTS RESERVED.
Reproduction, republication or redistribution of SAAMI technical drawings and data sheets in any manner, in whole or in part, without SAAMI's prior written consent is prohibited.

Note: This drawing is subject to change.
Current version is available at www.saami.org.

SAAMI
Sporting Arms and Ammunition Manufacturers' Institute, Inc.
Since 1926

MAXIMUM CARTRIDGE / MINIMUM CHAMBER

500 SMITH & WESSON MAGNUM

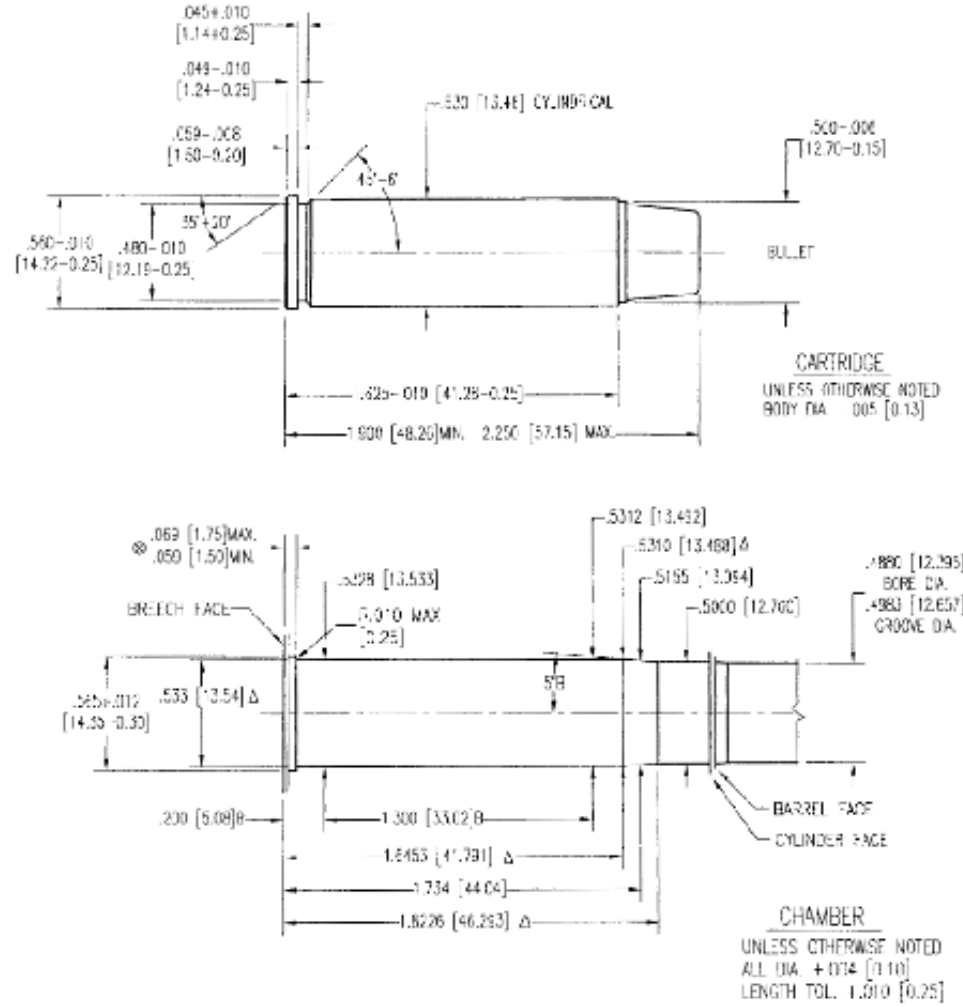

Δ 6 GROOVES
Δ .130+.003 [3.30+0.08] WIDE
TWIST: 18.75 [476.3] R.H. OPTIONAL
MIN. BORE & GROOVE
AREA: .1301 SQ. IN.
[83.939 mm²]

NOTE:
B=BASIC
[XX.XX]=MILLIMETERS
B= HEADSPACE DIMENSION
Δ= REFERENCE DIMENSION
✱ DIMENSIONS ARE TO INTERSECTION OF LINES
ALL CALCULATIONS APPLY AT MAXIMUM MATERIAL CONDITION (MMC)

COPYRIGHT © SPORTING ARMS AND AMMUNITION MANUFACTURERS' INSTITUTE, INC. ("SAAMI"). ALL RIGHTS RESERVED.
Reproduction, republication or redistribution of SAAMI technical drawings and data sheets in any manner, in whole or in part, without SAAMI's prior written consent is prohibited.

Note: This drawing is subject to change.
Current version is available at www.saami.org.

SAAMI
Sporting Arms and Ammunition Manufacturers' Institute, Inc.
Since 1926

MAXIMUM CARTRIDGE / MINIMUM CHAMBER

500 SPECIAL

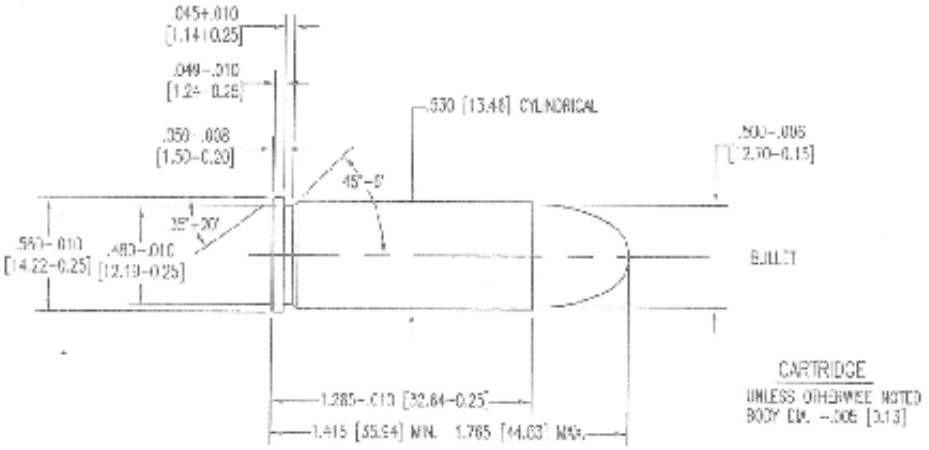

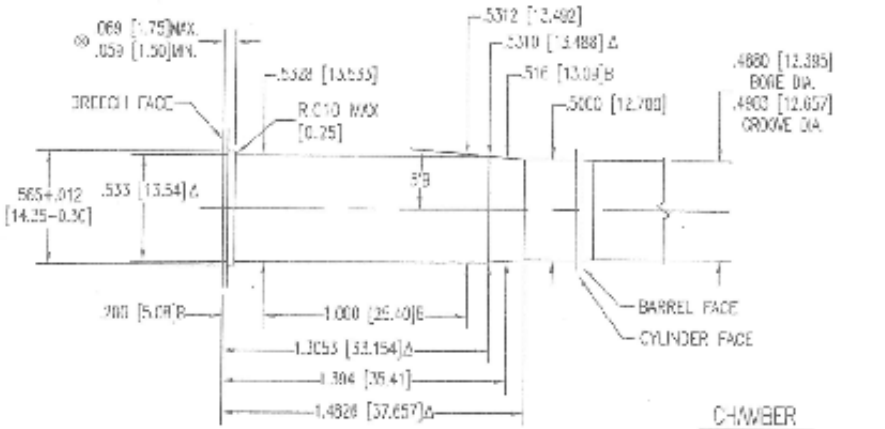

A 6 GROOVES
Δ.130+.003 [3.30+0.08] WIDE
TWIST: 18.75" [476.3] R.H. OPTIONAL
MIN. BORE & GROOVE
AREA: .1911 SQ. IN.
[123.29 mm²]

NOTE:
B=BASIC
[XX.XX]=MILLIMETERS
⊘ = HEADSPACE DIMENSION
Δ = REFERENCE DIMENSION
*DIMENSIONS ARE TO INTERSECTION OF LINES
ALL CALCULATIONS APPLY AT MAXIMUM MATERIAL CONDITION (MMC)

COPYRIGHT © SPORTING ARMS AND AMMUNITION MANUFACTURERS' INSTITUTE, INC. ("SAAMI"). ALL RIGHTS RESERVED.
Reproduction, republication or redistribution of SAAMI technical drawings and data sheets in any manner, in whole or in part, without SAAMI's prior written consent is prohibited.

MISCELLANEOUS: FRANGIBILITY

To be considered "***frangible***" against AR500 steel targets for the purposes of law enforcement training, ammunition for centerfire pistol and revolver shall not produce any individual fragments weighing more than 5% of the nominal bullet weight when tested as follows:

(1) A sample size of ten (10) rounds shall be fired.

(2) The distance from the muzzle to the impact point shall be 10.0' ± 1.0' (3.0 m ± 0.3 m).

(3) A minimum of 85% of the total nominal weight of the bullets fired shall be recovered.

(4) Testing is in accordance with the procedures detailed in Section II and equipment as shown in Section III.

DUMMY CARTRIDGE
GUN FUNCTIONING

BASIC CARTRIDGE

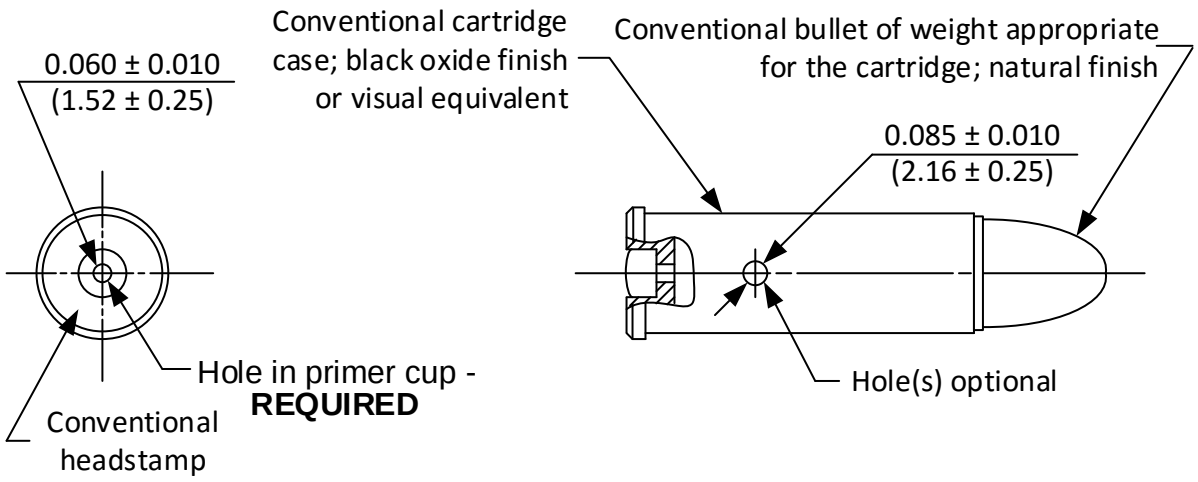

ALTERNATE CARTRIDGE

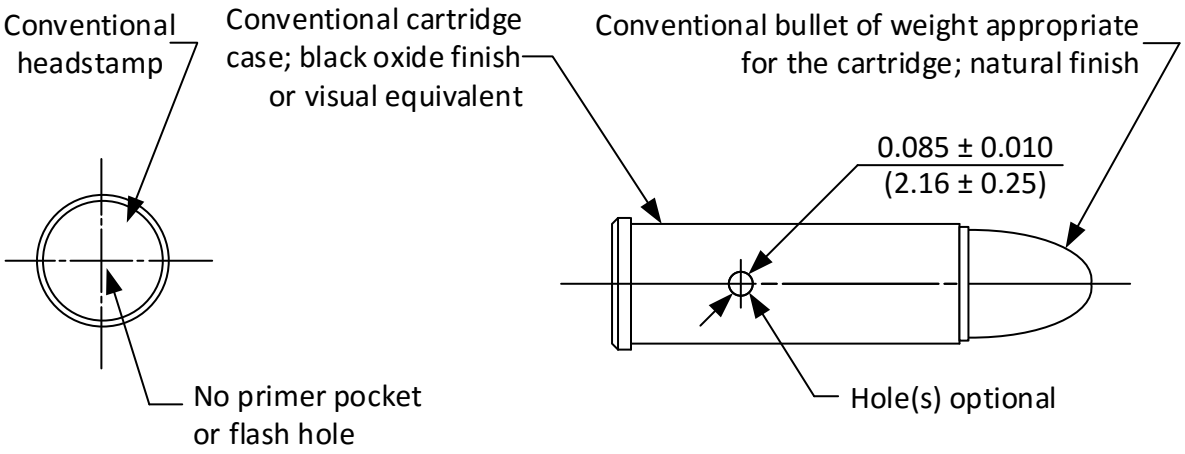

NOTE
Illustrates form only!
Pertinent dimensions shown on appropriate cartridge drawing.

(XX.XX) = millimeters

DUMMY CARTRIDGE DISPLAY

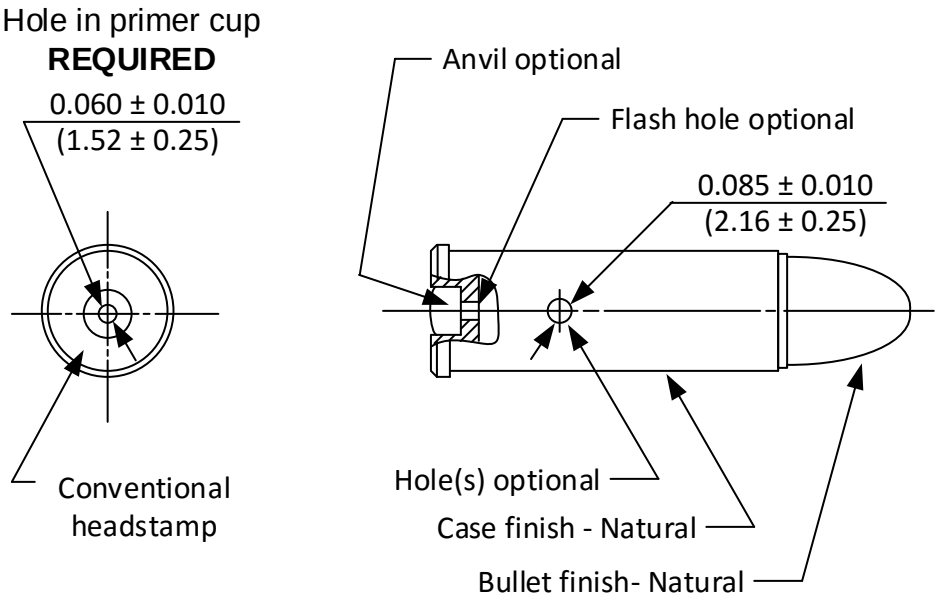

NOTE
Illustrates form only!
Pertinent dimensions shown on appropriate cartridge drawing.

(XX.XX) = millimeters

BLANK CARTRIDGE

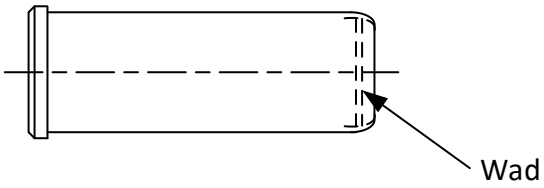

NOTE
Illustrates form only!
Pertinent dimensions shown on appropriate cartridge drawing.

TOLERANCE – BULLET WEIGHT

1. Lead and lead-core bullets:

Less than 100 grains..... Nominal weight ± 2.0%

Equal to or greater than 100 grains ..... Nominal weight ± 1.5%

2. Bullets of principally non-lead construction:

All bullet weights..... Nominal weight ± 3.0%

PROCEDURE:
VELOCITY & PRESSURE TESTING

I. SCOPE

A. This procedure covers the testing of ammunition for assessment of velocity and pressure using either the copper crusher method of pressure measurement or with piezoelectric pressure transducers ("transducers").

II. GENERAL

A. When testing using copper crushers, velocities and pressures are measured simultaneously using test barrels fitted with short pistons and gas checks.

B. When testing using transducers, velocities and pressures are measured simultaneously.

C. Recommended values for velocity and pressure of all centerfire pistol and revolver cartridges are tabulated in Section I. When required, a retest of double the original quantity may be fired with statistically equivalent tolerances.

D. Velocities and pressures should be measured using horizontally-mounted test barrels in accordance with the drawings and descriptions listed in Section III.

III. EQUIPMENT

A. COMMON

Item	Type	Alternate
1. Universal receiver	"Frankford Arsenal"	or equivalent
2. Photoelectric screens	Oehler Model 55 or 57	or equivalent
3. Ballistic measurement system	Oehler Model 85	or equivalent

B. COPPER CRUSHER TESTING

Item	Type	Alternate
1. Test barrel	Piston type	- - -
2. Pistons	Short	- - -
3. Gas Checks	0.206", waxed or unfilled	- - -
4. Copper crushers	.146" x .400" or .225" x .400" as needed	- - -
5. Micrometer	Capable of measuring to 0.0005"	- - -
6. Tarage table	Specific for lot of crushers in use	- - -

C. TRANSDUCER TESTING

Item	Type	Alternate
1. Charge Amplifier	PCB, Model 443B02	or equivalent
2. Voltmeter, Peak Capture	PCB, Model 444A152	or equivalent
3. Transducer	PCB, Model 117B*XXX*	or equivalent
4. Low Noise Cable	PCB, Model 003C*XX*	or equivalent
5. Integrated Data Acquisition System	Oehler Research, Inc., System 85	or equivalent

IV. HANDLING OF AMMUNITION

A. Cartridges to be tested should be placed in a vertical position with primer-end down in a recessed holding block.

B. When the appropriate test barrel has been properly serviced and the chronograph reset, a cartridge should be lifted vertically from the block. It should be rotated slowly, end over end, in a vertical plane through 360° pausing momentarily when the powder is at the bullet end and again when the powder is at the primer end.

C. The cartridge is then rotated slowly, a minimum amount to enter the chamber, keeping the primer end in the lowest possible position until inserted gently and carefully into the chamber.

D. The cartridge should be seated in the chamber as far as practicable with the fingers. The bolt or breech mechanism should be closed gently in order not to disturb the position of the powder in the cartridge case. The object of this method of handling cartridges is to position the propellant powder at the primer end of the cartridge case by permitting it to fall gently against the primer while rotating the case.

E. The rate of fire should not be rapid enough to cause excessive heating of the barrel. The time between rounds depends on the equipment, as the barrel may be cooled by a constant stream of air on the outside or by directing air through the bore after each ten rounds.

F. Ammunition conditioning should be between 60° - 80°F (15.6° - 26.7°C).

G. A minimum of one and up to three warming shots should be fired before firing each series for record. The velocity and/or pressure of these shots may be recorded, but should not be included in the record of the sample.

V. PRESSURE DETERMINATION

A. COPPER CRUSHER TESTING

1. Insert wax-filled gas check in piston hole with open end toward chamber and seat to approximately one-half the depth of the piston hole with seating tool. (Exceptions: 357 Magnum, 41 Remington Magnum – unfilled gas checks may be used.)
2. Dip piston shank in oil and drain until but one drop of oil remains. Scrape the remaining drop from the bottom of the piston or blot remaining oil on a flannel patch.
3. Insert piston in piston hole and seat on gas check manually. Do not force by striking or hammering.



CAUTION: The piston must be checked to make sure it slides freely, but not loosely, in the piston hole at all times. If the piston does not slide freely, it should be withdrawn from the piston hole and examined. Any black deposits should be removed with worn crocus cloth. If the piston is still not free in the piston hole, the hole should be cleaned with worn crocus cloth.

4. Insert cartridge to be tested in chamber of standard velocity and pressure test barrel in the manner described in paragraphs IV(B) through IV(D), above.
5. Using finger pressure, push the piston down into the piston hole until the piston/gas check is fully seated.
6. Center crusher cylinder appropriate for the cartridge under test upon the head of the piston. Slide the anvil bridge so as to center it over the crusher/piston and securely

tighten the set screws on the bridge. Gently tighten the anvil against the crusher cylinder using light finger pressure.



CAUTION: Overtightening the anvil can cause precompression of the crusher cylinder and affect the subsequent pressure reading. Use care to not over-tighten the anvil.



CAUTION: The face of the piston head, face of set screw and faces of crusher must be free from oil.

7. The breech mechanism should be closed gently.
8. After firing the cartridge, the compressed crusher cylinder should be removed and measured for remaining length. Pressure is determined from this length by the use of the Tarage Table, furnished with the cylinders, for the piston diameter used.
9. Wax-filled gas checks should be changed after firing each series of two warming shots and ten rounds for record. Unfilled gas checks should be removed after each shot by driving the gas check downward with the knockout tool.
10. The fired cartridge case containing the gas check and disk blanked from the cartridge case is removed from the chamber.
11. Gas checks knocked into the bore should be ejected from the muzzle by the introduction of compressed air directed through the chamber.



CAUTION: The chamber and bore should be checked to make certain that the barrel is unobstructed before proceeding further.

12. For subsequent shots in a series, the procedure shown in paragraphs V(A)(1) through V(A)(11) is repeated.

B. PIEZO-ELECTRIC TRANSDUCER TESTING

1. EQUIPMENT PREPARATION

1.1 Refer to the SAAMI-recommended piezo pressure transducer installation in a pressure barrel illustrated in Section III.

1.2 The charge amplifier and peak capture voltmeter should have a certified calibration traceable to the National Institute of Standards and Technology.

2. INITIAL SET-UP

2.1 Turn on the electronic equipment and allow to stabilize as recommended by the manufacturer.

2.2 Inspect the transducer mounting cavity in the pressure barrel to assure that the seal seat is free of dirt and any other foreign matter.

2.3 Mount transducer with steel spacer rings into the test barrel as described in PCB Operating Instructions Manual.

2.4 Loosen, but do not remove, the slotted clamp.

2.5 Thread the transducer into the mounting port. Adjust the slotted clamp to allow guide pin to enter guide hole. Continue to turn transducer nut into the mounting port. When transducer bottoms, tighten the slotted clamp and torque the transducer as recommended by the manufacturer.

2.6 It is essential that the sensing surface of the transducer be flush with the chamber inside diameter. Care must be exercised to obtain correct depth as well as exact rotational alignment. Depth adjustment is accomplished by the use of various thickness spacers. In order to set the depth exactly it may be necessary to hone the spacers to the desired thickness.

2.7 Connect equipment as shown in Figure 5 or Figure 6, page 91-92.

a. **NOTE:** Configurations 1 and 2 are interchangeable.

IMPORTANT: Always switch the amplifier to the "zero lock" mode by pressing the "ZERO" button before making connections to the Model 443B02, and allow switch to remain in this position during such connections. This protects the FET input stage against possible gate damage from excessive accumulated static charge.

2.8 Set the charge amplifier controls for 0.2 Hz short time constant, transducer sensitivity to the slope (m) obtained from the transducer least square line equation, output sensitivity to 0.100 mV/unit, and set the amplifier to operating mode (releasing the "zero lock" by pressing the "ZERO" button a second time).

2.9 Select digital peak meter, positive input, peak mode, and 10-volt range.

2.10 Take note of the transducer offset value (P) obtained from the least square line equation. This value will be used later in making final peak pressure determination.

(a) The offset value may also be dialed into an instrumentation system capable of providing direct peak pressures without data manipulation.

3. PROCEDURE

3.1 Reset all pressure instrumentation and assure that the peak meter digital display reads all zeros. Test rounds may now be fired.

3.2 For each round fired, the pressure reading on the digital display should be recorded and pressure instrumentation reset.

4. PEAK PRESSURE DETERMINATION

4.1 To determine peak pressures, add as required, the pressure offset value to the pressure readings obtained in the firing test. Adding the offset value is not required if it is dialed in on the peak meter.

VI. VELOCITY DETERMINATION

A. Handling of the ammunition should be in accordance with the instructions in paragraph IV.

B. Photoelectric screens should be arranged in accordance with the arrangement shown in Section III, page 131, "*Equipment: Schematic Layout of Velocity Screens*".

C. A table of time of flight vs. velocity should be used to determine instrumental velocity at 15 feet (4.57 m), nominal, from the gun muzzle (not required when using direct reading equipment).

D. It is recommended that a blast shield be positioned between the muzzle of the Universal Receiver test barrel and the first velocity screen to minimize possibility of premature triggering of the velocity screens. With velocities below the speed of sound, the muzzle blast and/or muzzle flash will reach the screen before the bullet and may cause premature triggering of the screen. For example, premature triggering of the first screen will result in abnormally low velocity readings. Premature triggering of both screens will result in velocity readings which correspond to the speed of sound (approximately 1,120 fps at sea level and normal atmospheric conditions).

   (i) The blast shield should be made of rigid, opaque material of sufficient strength to withstand the shock wave but not be resistant to the passage of the projectile.

VII. RECORDING OF TEST RESULTS

A. The following data should be recorded for each series of shots fired for velocity and pressure.

1. Ammunition Data
   1.1 Date of test
   1.2 Nominal cartridge identification
   1.3 Cartridge caliber
   1.4 Bullet weight and type
   1.5 Powder charge, type, and lot
   1.6 Priming
   1.7 Type of lubricant (if any)
   1.8 Code or date of loading
2. Average velocity, uncorrected.
3. Average pressure, uncorrected.
4. Maximum and minimum individual velocity.
5. Maximum and minimum individual pressure.
6. Extreme variation (range) of velocity.
7. Extreme variation (range) of pressure.
8. Other statistical indication of variation (optional).
9. Correction to results from firing Reference Ammunition (optional).
10. Corrected average velocity (optional).
11. Corrected average pressure (optional).
12. Recommended values
    12.1 Average velocity
    12.2 Average pressure
    12.3 Velocity and pressure variation
13. Test firearm and range data

13.1 Barrel length and serial number
13.2 Barrel history
13.3 Transducer serial number / copper crusher lot number
13.4 Type of chronograph and screens

14. Test personnel.

VIII. USE OF REFERENCE AMMUNITION

A. Purpose
   1. Reference ammunition, assessed by firings at the ranges of member companies, is available for calibrating ranges, firearms and other equipment for velocity and pressure only.

B. Supply
   1. On request, the SAAMI Technical Office[1] will supply information on the manufacturer of specific Reference Ammunition. The method of identifying Reference Ammunition is shown in Section II.
   2. Requests for Reference Ammunition should be addressed to the manufacturer of the specific cartridge.

C. Assessment
   1. Details of the assessment tests are shown in Section II.

D. Clearing House
   1. Results of assessment tests of Reference Ammunition are tabulated, analyzed and distributed by the SAAMI Technical Office.

E. Corrections
   1. For method of applying corrections to tests of service loads see Section II.

F. Calibration
   1. For method of calibrating ranges and equipment, see Section II.

IX. TEST BARREL CLEANING

A. Test barrels should be cleaned regularly using solvents, brushes and/or other equipment as dictated by the type and severity of fouling in the test barrel.

[1] Refer to Section III, Page 130, for contact information for the SAAMI Technical Office.

VELOCITY & PRESSURE BARRELS: QUALIFICATION

All barrels are not necessarily suitable for use in determining pressure or velocity levels, even though they may conform to the dimensions given on the appropriate Standard Velocity and Pressure Barrel drawing in this Standard. New barrels may require a number of rounds to be fired to remove sharp corners or burrs resulting from the manufacturing process. Barrels in service do not have an unlimited life and may become unserviceable from wear and erosion. There is no predictable number of rounds to which a barrel should be exposed before use for pressure and velocity determinations, nor is there a predictable round life for such equipment.

The following procedure is suggested for determining the suitability of any barrel for pressure and velocity test use:

> Fire ten rounds of SAAMI Reference Ammunition following the procedures as shown in this Standard. The average velocity and pressure results of the test should be within the Inclusion Limits as given on the latest assessment of the lot fired.

In the case of a new barrel, the firing of more breaking-in shots may be indicated after which the Reference Ammunition test should be repeated.

In the case of barrels which have been in service, refurbishing of the piston and piston hole, removal of fouling, or other corrective procedures may be implemented followed by a retest.

VELOCITY & PRESSURE BARRELS: MOUNTING IN RECEIVERS

It is essential that close headspace be maintained in velocity-pressure testing equipment if reliable test results are to be achieved.

In mounting test barrels to Universal Receivers or test actions, a headspace not exceeding 0.003" (0.07 mm) over minimum should be maintained. This may be measured by headspace gauges, shim stock or feeler gauges, or a combination thereof whichever is most appropriate for the type of equipment being used.

Headspace adjustments with the Universal Receiver may be accomplished by several methods:

1. Formed shim stock behind the firing-pin plate.
2. Formed shim stock on the rear bearing shoulder of the Barrel Collar.
3. Adjustment of the Breech Block Locking Screws.

PROCEDURE:
USE OF PISTON HOLE GAUGES

Pressure barrel piston hole size should be checked periodically with piston hole gauges to determine whether or not erosion is present. Piston hole erosion can cause high or erratic pressure readings and low velocity readings.

Three piston hole gauges for each piston hole size (0.146" diameter, 0.206" diameter) constitute a set: 1) plug gauge, 2) longitudinal gauge and, 3) transverse gauge. Each gauge is double-sided, "go" and "no go". The gauges are used as described below:

1. Attempt to insert the appropriate "no go" plug gauge into the top of the piston hole.

2. Insert the appropriate "no go" longitudinal gauge through the chamber, align it with the bottom of the piston hole, and attempt to insert the gauge upward into the hole.

3. Attempt to insert the appropriate "no go" transverse gauge into the bottom of the piston hole in the same manner as described above for the longitudinal gauge.

4. If the piston hole accepts any of the "no go" gauges, the hole diameter is larger than the maximum acceptable.

The probable cause of extreme piston hole erosion is poor gas sealing (improper use of gas checks and/or insufficient oiling).

In some cases, minor erosion does not seem to affect pressure and velocity readings. An analysis of test results will indicate whether or not repair is necessary.

PROCEDURE:
PIEZOELECTRIC TRANSDUCER CALIBRATION

I. SCOPE

A. This procedure covers the calibration of piezoelectric pressure transducers ("transducers") for use in the measurement of ballistic pressures.

II. TEST EQUIPMENT

	ITEM	TYPE	ALTERNATE
1.	Digital Voltmeter	Fluke, Model 8440	or equivalent
2.	Charge Amplifier	PCB, Model 443B02	or equivalent
3.	Transducer Calibrator (Direct fluidic calibrator)	PCB Group; The Modal Shop, Inc.; Model K9905D	or equivalent
4.	Insulation Tester	Kistler, Model 5491	or equivalent
5.	Transducer	PCB, Model 117B*XXX*	or equivalent
6.	Low Noise Cable	PCB, Model 003C*XX*	or equivalent
7.	Calibration Adapter	PCB, Model 090B Series	or equivalent

III. EQUIPMENT PREPARATION

A. All instruments should be operational and calibrated per manufacturer specification.

B. The transducer calibrator and instruments used to calibrate the charge amplifier and digital voltmeter should have a certified calibration traceable to the National Institute of Standards and Technology.

C. Transducers should be properly maintained per manufacturer recommendations or stored in a desiccator when not in use.



CAUTION: When not in use, the cable, transducers, and instrument connectors should be stored with plastic caps to prevent contamination.

D. Measure the internal resistance of the transducer and low noise cable. If the resistance is less than 10^{12} ohms, follow the steps detailed in paragraph IV, *Transducer Initialization*. If the resistance is in the 10^{12} to 10^{14} ohm range, proceed to paragraph V, *Transducer Calibration*.

IV. TRANSDUCER INITIALIZATION

A. Clean transducer and low noise cable connectors using an acceptable solvent per the manufacturer's recommendations.

B. Bake-out transducer and low noise cable in a temperature controlled oven for 24 to 48 hours at 250°F (121°C).

C. Allow oven to return to ambient temperature at a slow rate.

D. After removing the transducer and cable from the oven, check the internal resistance of the transducer. The resistance should be in the 10^{12} to 10^{14} ohm range.

E. Place protective caps on transducer and cable connectors to prevent contamination.

V. TRANSDUCER CALIBRATION

A. INITIAL SET-UP

1. Turn on the electronic equipment and allow it to stabilize as recommended by the manufacturer.
2. Inspect the transducer mounting cavity to assure that the seal seat is free of dirt and any other foreign matter.
3. Mount transducer with steel spacer rings into calibration fixture as described in PCB Operating Instructions Manual.
4. Loosen, but do not remove, the slotted clamp.
5. Thread the transducer into the mounting port. Adjust the slotted clamp to allow guide pin to enter guide hole. Continue to turn transducer nut into the mounting port. When transducer bottoms, tighten the slotted clamp and torque the transducer as recommended by the manufacturer.
6. It is essential that the sensing surface of the transducer be flush with the chamber inside diameter. Care must be exercised to obtain correct depth as well as exact rotational alignment. Depth adjustment is accomplished by the use of various thickness spacers. In order to set the depth exactly it may be necessary to hone the spacers to the desired thickness.
7. Mount calibration adapter with transducer on the calibrator.
8. Insert the cartridge case with an inert or fired primer into calibration adapter and complete fixture assembly as per PCB instruction manual. If the sample cartridge is a loaded round, it may be disassembled, the powder removed, and the primer in the empty case then fired. An optional procedure is to deprime the case and use the O-ring/plug seal shown in Section III - page 135. Cycle this case to the appropriate maximum pressure in order to "seat" the transducer.
9. Connect transducer and instrumentation as indicated in Figure 2 on page 88.
10. Set the charge amplifier sensitivity to 0.999 and set the time constant switch to LONG.
11. Set DVM to 10-volt range.

B. CALIBRATION

1. Adjust pressure readout indicator of the transducer calibrator to 0 psi with no pressure on hydraulic lines.
2. Insert a new cartridge case.
3. Reset charge amplifier and digital voltmeter (DVM) to obtain zero volts output.
4. Apply pressure in increments as indicated in Section II, pages 86-87. Calibration pressure range should cover the pressure ranges shown in Section II, pages 86-87. DO NOT exceed the maximum pressure established by the manufacturer for the fixture.
5. Record DVM reading after the pressure readout indicator is exactly at desired pressure level. Do not release the pressure until the highest pressure level, for the cartridge under test, has been reached. Read the pressure at each increment. Do not overshoot the pressure points!
6. After reaching the highest calibration pressure level, release the pressure slowly.
7. Replace the cartridge case in calibration adapter.
8. Repeat steps 1 through 7 until a minimum of ten valid data points are obtained.



CAUTION: Always ***INCREASE*** pressure to desired level, never decrease pressure to desired level.

9. Transducers need to be re-calibrated when changing brands of ammunition or if there have been changes in cartridge case processes and/or material.

C. DATA REDUCTION

1. Calculate the average value for the output voltages recorded at each pressure increment. Multiply these average values by the charge amplifier sensitivity (pC/V) to obtain the transducer charge output (Q) at these pressure increments (P).
2. Obtain a least square line equation using the transducer charge output (Q) as the dependent variable and pressure (P) as the independent variable. $Q = mP \pm q$.
3. A manual method of calculating the least square line equation is given in tabular form on page 89. It is recommended that when using this technique, all numbers be carried to the third decimal place.
4. Obtain the pressure (P) offset value when Q in the line equation is zero. Refer to Figure 4, page 90.

VI. CALIBRATION CHECK

A. When the calibration calculations are complete, the sensitivity should be set on the charge amplifier. The digital voltmeter is set at zero. A new sample cartridge case is put in the calibration fixture and the hydraulic pressure increased to the highest pressure reached in the calibration. The digital voltmeter reading plus the offset should equal the hydraulic gauge reading. Check calibration again by inserting a second cartridge case. As a guideline, these values should agree within ±1.5% of the gauge reading. If the transducer does not meet this guideline then recheck the calculations and/or recalibrate.

VII. TRANSDUCER RECORDS

A. Date of calibration
B. The number of rounds to which the transducer has been exposed during test firing.
C. Calibration pressure (P), charge amplifier voltage output (V), and transducer charge output (Q).
D. Charge amplifier sensitivity.
E. Least square line equation.
F. Pressure offset, and transducer sensitivity (slope = m).
G. Transducer identification.
H. Date of next calibration.

TRANSDUCER CALIBRATION: INCREMENTS AND RANGES

The following increments and ranges are to be used for the calibration of transducers:

Caliber	MAP (psi/100)	Pressure Increments (psi)	Pressure Range (psi)
9mm Luger[1]	350	5,000	20,000 – 45,000[1]
9mm Luger +P[1]	385	5,000	20,000 – 45,000[1]
9 x 18 Makarov	241	3,000	18,000 – 30,000
9 x 23 Winchester	550	5,000	35,000 – 60,000
10mm Automatic	375	5,000	20,000 – 45,000
221 Remington Fireball	600	5,000	35,000 – 60,000
25 Automatic	250	3,000	18,000 – 30,000
25 North American Arms	239	3,000	18,000 – 30,000
30 Luger (7.65mm)	280	3,000	20,000 – 35,000
32 Automatic	205	2,000	15,000 – 25,000
32 H&R Magnum	N/E[2]	N/E	N/E
32 North American Arms	239	3,000	18,000 – 30,000
32 Short Colt	175	2,000	12,000 – 20,000
32 Smith & Wesson	170	2,000	12,000 – 20,000
32 Smith & Wesson Long	150	2,000	10,000 – 18,000
327 Federal Magnum	450	5,000	25,000 – 50,000
356 TSW	500	5,000	35,000 – 60,000
357 Magnum	350	5,000	20,000 – 45,000
357 Sig.	400	5,000	20,000 – 45,000

[1] The calibration range for regular/+P cartridges is selected to provide a single useful band for both pressure levels.

[2] N/E = Not Established.

Caliber	MAP (psi/100)	Pressure Increments (psi)	Pressure Range (psi)
38 Automatic	265	3,000	18,000 – 30,000
38 Smith & Wesson	145	2,000	10,000 – 18,000
38 Special[1]	170	3,000	15,000 – 30,000[1]
38 Special Match[1]	170	3,000	15,000 – 30,000[1]
38 Special +P[1]	200	3,000	15,000 – 30,000[1]
38 Super Automatic +P	365	5,000	20,000 – 45,000
380 Automatic	215	2,000	15,000 – 25,000
40 Smith & Wesson	350	5,000	20,000 – 45,000
400 Cor-Bon	350	5,000	20,000 – 45,000
41 Remington Magnum	360	5,000	20,000 – 45,000
44 Remington Magnum	360	5,000	20,000 – 45,000
44 S&W Special	155	2,000	10,000 – 18,000
45 Automatic	210	3,000	15,000 – 30,000[1]
45 Automatic Match	210	3,000	15,000 – 30,000[1]
45 Automatic +P	230	3,000	15,000 – 30,000[1]
45 Auto Rim	N/E[2]	N/E	N/E
45 Colt	140	2,000	10,000 – 18,000
45 Glock Automatic Pistol	230	3,000	18,000 – 30,000
45 Winchester Magnum	415	5,000	25,000 – 50,000
454 Casull	650	5,000	35,000 – 60,000
460 S&W Magnum	650	5,000	35,000 – 60.000
475 Linebaugh	500	5,000	35,000 – 60,000
480 Ruger	480	5,000	30,000 – 55,000
50 Action Express	350	5,000	20,000 – 45,000
500 S&W Magnum	600	5,000	35,000 – 60,000
500 Special	360	5,000	20,000 – 45,000

[1] The calibration range for regular/+P cartridges is selected to provide a single useful band for both pressure levels.

[2] N/E = Not Established.

TRANSDUCER CALIBRATION: EQUIPMENT INTERCONNECTION

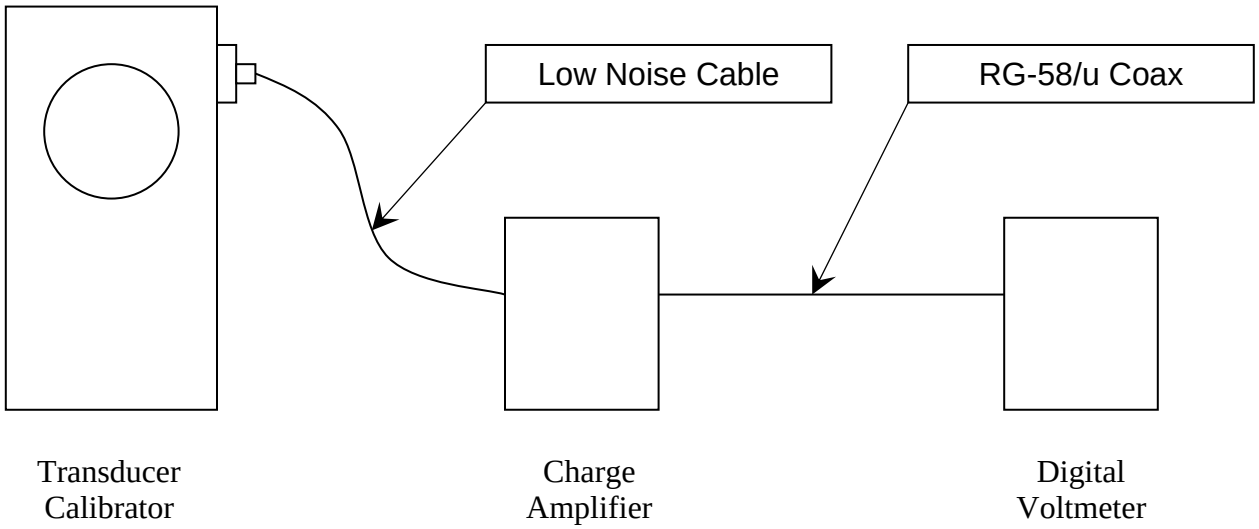

Figure 2

TRANSDUCER CALIBRATION: LEAST SQUARE LINE COMPUTATION

$$Q = mP + q$$

$$m = \frac{\sum(PQ) - \frac{\sum P \sum Q}{n}}{\sum P^2 - \frac{(\sum P)^2}{n}} \qquad q = \frac{\sum P \sum(PQ) - \sum(P^2) \sum Q}{(\sum P)^2 - n \sum P^2}$$

Where:

n = Number of data points.

Q = Charge, in picocoulombs, pC.

m = Slope ($\Delta Q/\Delta P$); transducer sensitivity in pC/psi.

P = Pressure, in pounds per square inch, psi.

q = Charge intercept, in picocoulombs, pC.

V = Average output voltage at the indicated pressure, in volts, v.

S = Charge amplifier sensitivity.

$$Offset = \frac{q}{m}$$

P	S	V	Q (SV)	(PQ)	P^2
TOTAL	ΣP =			ΣQ =	Σ(PQ) =	Σ(P^2) =

Figure 3

OUTPUT vs. PRESSURE

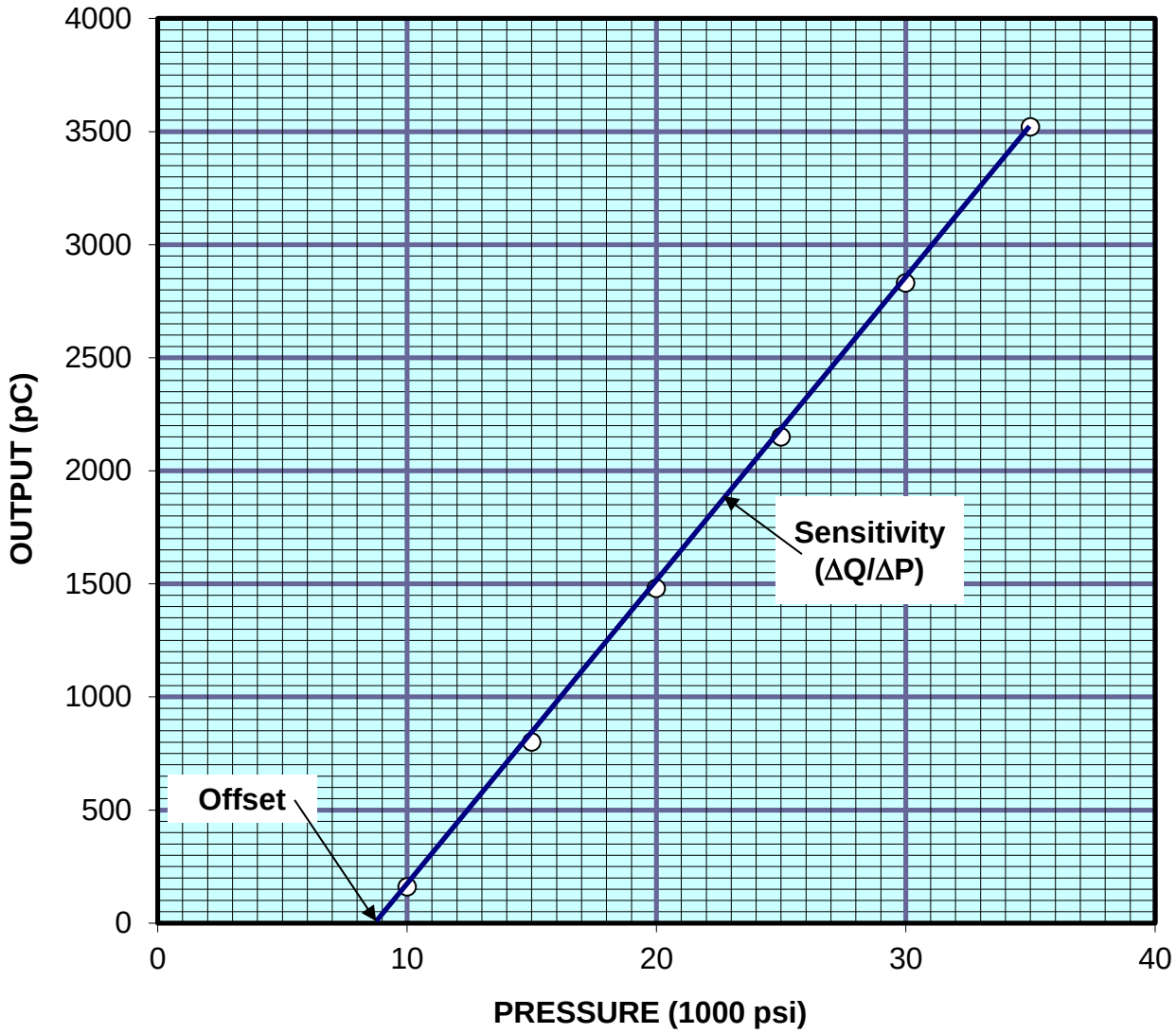

Figure 4

FIRING TEST:
EQUIPMENT INTERCONNECTION

Configuration 1

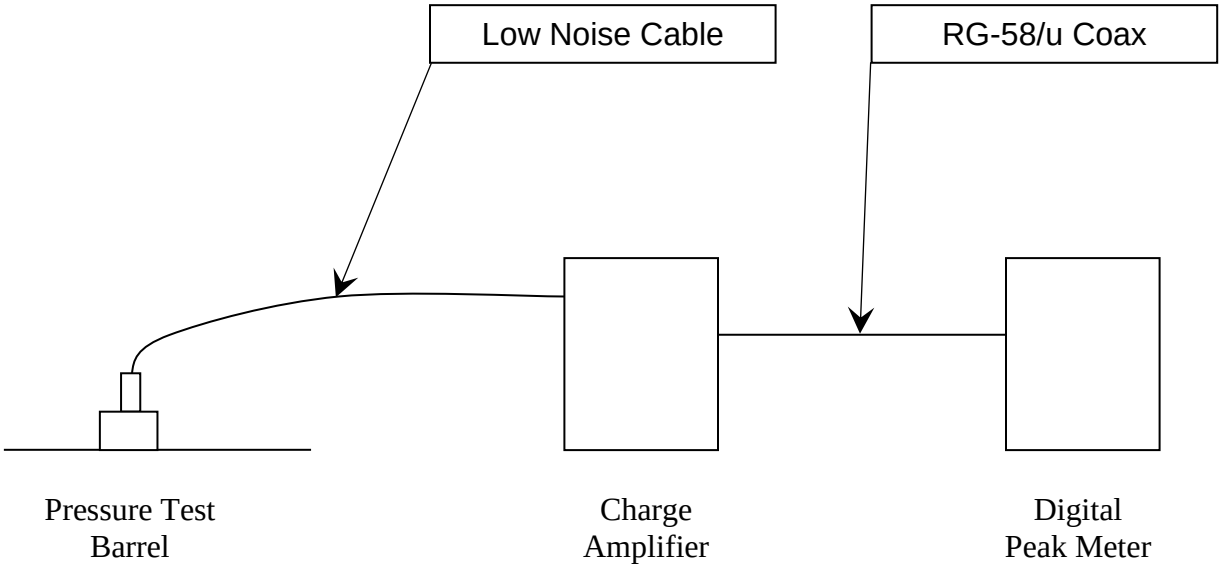

Figure 5

FIRING TEST:
EQUIPMENT INTERCONNECTION (cont'd)

Configuration 2

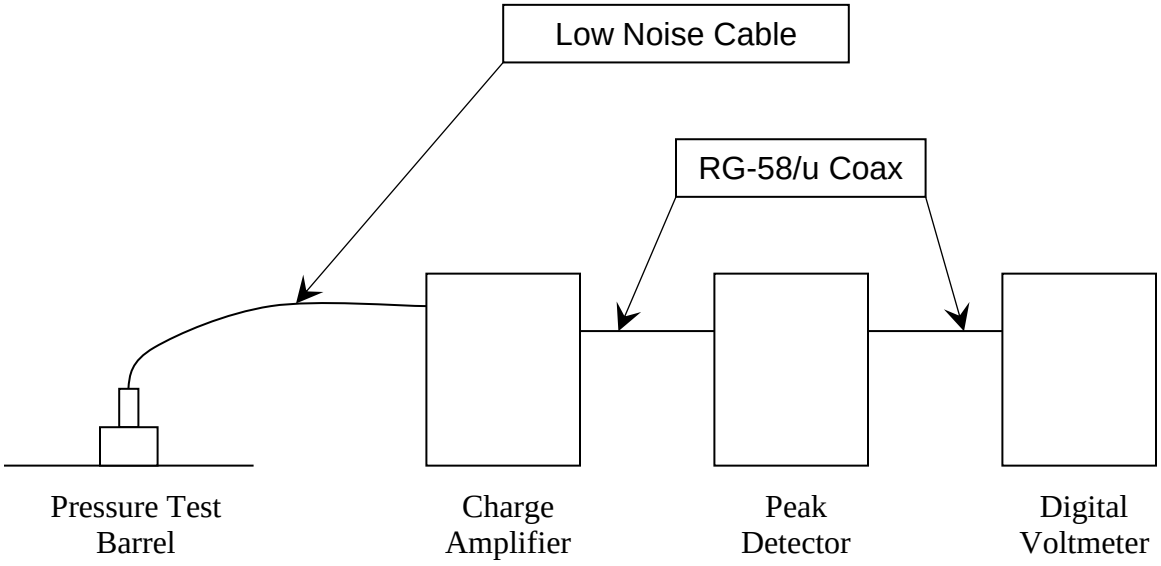

Figure 6

REFERENCE AMMUNITION: USE

A. PURPOSE
Reference Ammunition is for the purpose of relating pressure and velocity test results at all ranges.

B. PROCUREMENT
Reference Ammunition is procured as noted in Section III – page 128.

C. USE
The use and usefulness of Reference Ammunition in connection with the testing of ammunition for velocity and pressure is predicated upon two basic assumptions as follows:

1. Associated with a given batch of Reference Ammunition at a given time is an assessed average velocity, an assessed average pressure, as well as upper and lower limits for each, which the averages of any ten round test may be expected to fall within when:

    a. The reference ammunition manufacturer has applied appropriate safeguards to assure homogeneity of the lot.

    b. The ammunition is tested only after being conditioned under controlled temperature and humidity.

    c. The ammunition is tested in equipment compliant with Section III recommendations.

    d. The ammunition is handled in strict accordance with Section II recommendations.

    e. All auxiliary measuring equipment has been set up in accordance with Section II recommendations and is in proper working condition.

2. Although there will be changes over time in the velocity and pressure assessments, the changes occur sufficiently slowly to be detected by periodic reassessments before they have achieved a magnitude sufficient to impair the usefulness of the reference rounds. In other words, the velocity and pressure assessments are reasonably stable with time.

The average velocity and pressure that may be developed by a sample of Reference Ammunition in any given standard test barrel under given test conditions may be different from the results obtained under the test conditions referred to above in assumption 1 due to minor equipment variations and statistical sampling error. Such values may be perfectly real, providing the auxiliary equipment introduces no errors.

In order to realize the benefits of Reference Ammunition, some rules must be adhered to. Nevertheless, each individual user must make the final judgments concerning how often it is used and the use of the data. It is important, therefore, that there be a clear realization of what it can and what it cannot tell the ammunition tester.

Reference Ammunition cannot guarantee the absolute accuracy of any test system. It does, however, provide simple and direct data from any given ammunition test equipment to determine how closely it relates to the acceptable, average system as used by SAAMI members.

In line with the preceding discussion, the following recommendations are made for the use of Reference ammunition:

A. Each Reference Lot should be conditioned before use.

B. How often Reference Ammunition is used shall be determined by the user's internal practices, taking into account such factors as historical knowledge of barrel life.

C. The recommended minimum sample shall be ten rounds.

D. In the event the observed average velocity and pressure of the sample falls within the *Inclusion Limits*, a correction may or may not be applied according to the procedure given in Step G at the discretion of the user.

E. If one average is outside of the *Inclusion Limits* and the other within, the average that exceeds the limits shall be corrected according to the procedure given in Step G.

F. If both averages are outside of the *Inclusion Limits*, both the velocity and pressure shall be corrected according to the procedure in Step G.

G. If the correction is to be applied, the correction shall be the difference between the assessed value and the observed average of the test.

REFERENCE AMMUNITION: SECONDARY REFERENCE AMMUNITION

Occasionally, a test station will have a need for an inordinately large supply of Reference Ammunition in considerable excess to the usual volume. In order to minimize the premature exhaustion of any particular lot, it is suggested that the station create its own secondary reference lot to fill the special need.

A secondary reference lot should consist of a supply of off-the-shelf ammunition, each box bearing the same manufacturer's code name. The secondary reference lot should be approximately equivalent in bullet weight, average velocity, and average pressure to the Reference Ammunition that it replaces.

REFERENCE AMMUNITION: NEW LOTS

I. GENERAL

Reference Ammunition lots have been established for those lots or loads designated by the Technical Committee. Responsibility for production of each of the selected lots is assigned to a member company that is responsible for maintaining a supply. A five-year supply is recommended. It is desirable that Reference Ammunition be consistent with Standard values for that particular round.

When a producer has prepared a new lot, it shall be his responsibility to announce the lot to the SAAMI Technical Office[2], giving a tentative assessment and other data. (An example of the recommended format for this announcement appears later in this section.)

The producer shall supply, at the time of the announcement of the new lot, to each member of the Reference Ammunition Group that has the capability to test that cartridge, one box of the new lot for immediate test. A current list of the testing capabilities of the Reference Ammunition Group is available from the SAAMI Technical Office on request.

The SAAMI Technical Office will announce the availability of the new lot to the participating ranges, giving the tentative assessment and other pertinent data. (An example of the recommended format for this announcement appears later in this section.)

II. METHOD OF ASSESSMENT

Before announcing a new lot of reference ammunition to the SAAMI Technical Office, the manufacturer should make sufficient tests to determine Tentative Values of pressure and velocity for the new lot.

1. The test barrels shall conform to the SAAMI specifications for internal dimensions, length and piston / piezo gauge location. (Refer to Section III.)

2. Counter-chronographs and photoelectric screens shall be used in velocity measurements. (See Section III.)

3. Ammunition shall be conditioned for a minimum of 24 hours at 70° ± 2°F (21.1° ± 1.1°C) with relative humidity of 60% ± 5% before firing.

4. For copper crusher assessments, only an approved crusher lot shall be used in pressure measurements. (See Section III – page 109 for proper crusher sizes.)

[2] Refer to Section III - page 130, for current contact information for the SAAMI Technical Office.

NEW REFERENCE LOT REPORTING FORM AND INSTRUCTIONS

These instructions pertain to the form shown in Section II, which is used for a Reference Ammunition producer to announce new lots to the SAAMI Technical Office, as well as for the SAAMI Technical Office to announce the new lot to participating ranges.

- - - -

ANNOUNCEMENT OF NEW REFERENCE AMMUNITION LOT

SUBJECT: T-4025 Reference Ammunition – Centerfire Pistol & Revolver
New Reference Lot

TO:

CARTRIDGE _____ Lot No. _____

Order Symbol _____

- TENTATIVE ASSESSMENT -

VELOCITY (ft/s)	PRESSURE (CUP in units of 100) PRESSURE (psi in units of 100)
AVERAGE: S.D.:	AVERAGE: S.D.:

Lot number this lot replaces _____

Please test the ammunition and report the results to the SAAMI Technical Office on the proper form (CF Section II) as soon as possible.

SIGNED:

DATE:

REFERENCE AMMUNITION: IDENTIFICATION PROTOCOL

SAAMI Reference Ammunition

This ammunition is to be used only for calibration
of test gauges for velocity and pressure.

LOT NUMBERING SYSTEM
(Typical numbers)

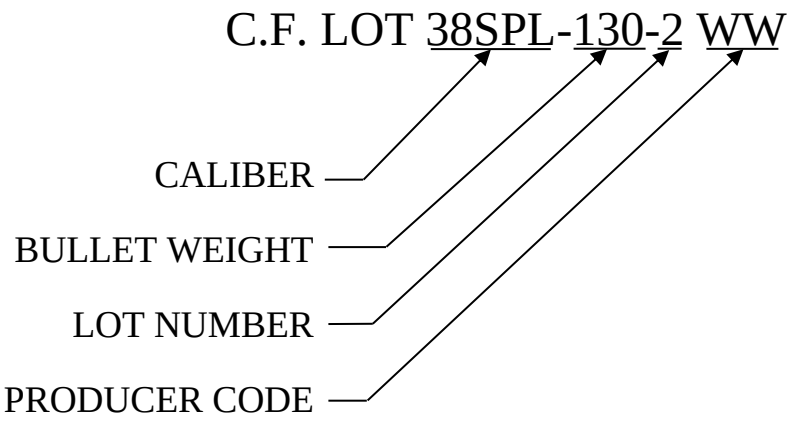

PRODUCER CODES

A = A-Square
B = Blount (ATK Ammunition Accessories) - OBSOLETE
CB = Cor-Bon / Glaser
CS = CCI/Speer
F = Federal Cartridge Co.
H = Hornady Manufacturing
R = Remington Arms Company, LLC
WW = Winchester Division, Olin Corporation

NOTE

BLACK LETTERING

REFERENCE AMMUNITION: PERIODIC ASSESSMENT

I. PROCUREMENT

Reference ammunition is procured as noted in Section III.

II. PERIODIC TESTS

A. STATIONS

1. All test conditions should conform as closely as possible to those prescribed in this Standard, and the following conditions should be met:

   a) Tests should consist of ten (10) rounds for velocity and pressure fired during a single day.

   b) Test barrels shall conform to SAAMI specifications for internal dimensions, length, and piston/transducer location.

   c) Counter-chronographs and photoelectric screens (or equivalents) shall be used in velocity measurements. (See Section III.)

   d) Ammunition shall be conditioned for 72 hours at 70° ± 2°F (21.1° ± 1.1°C) with relative humidity of 60% ± 5% before firing.

   e) Only an approved crusher lot shall be used in pressure measurements. (See Section III, page 109 for proper crusher sizes.)

2. Each station should report results of its firing in the test on approved forms to the SAAMI Technical Office[1]. A sample of this report form is presented later in this section.

B. CLEARING HOUSE

1. The SAAMI Technical Office serves as the clearinghouse for all Reference Ammunition ballistics and related information. It shall be the responsibility of the SAAMI Technical Office to schedule testing and to assemble and distribute results of periodic tests. This should be done on the proper Reference Ammunition report form. (Sample, Section II.)

2. The Reference Ammunition Report shall contain the average pressure, velocity, and related standard deviations as reported by each station for that lot. From this data, the SAAMI Technical Office will calculate and report the Raw Average, Corrected Average, Standard Deviation Averages, and Inclusion Limits.

3. To obtain the Raw Averages, the SAAMI Technical Office shall include the 10-round averages for the pressure and velocity of all reporting stations and the first and second previous assessment value. If the 10-round average from any station

[1] Refer to Section III - page 130, for current contact information for the SAAMI Technical Office.

varies from the Raw Average by more than plus or minus 35 fps in velocity OR plus or minus 2,500 CUP/psi in pressure, the pressure or velocity data from that (those) station(s) should be discarded. The mean pressure and velocity data should be recalculated omitting the discarded data. The new mean is the "Corrected Average". If the mean pressure value of a station is outside of the limits as defined above, but the velocity is in, the pressure data should be dropped and the velocity data retained. The converse is true as well. Using the Corrected Averages, the Inclusion Limits are determined as follows:

VELOCITY: MEAN = Same as Corrected Average
HIGH = MEAN + 35 fps
LOW = MEAN - 35 fps

PRESSURE: MEAN = Same as Corrected Average
HIGH = MEAN + 2,500 CUP/psi
LOW = MEAN – 2,500 CUP/psi

T-4025 STATION REPORT
REFERENCE AMMUNITION – PERIODIC ASSESSMENT
CENTERFIRE PISTOL & REVOLVER

STATION _____ SAAMI REFERENCE LOT _____

DATE _____ PREVIOUS ASSESSMENT
Velocity _____
Pressure Barrel No. _____ Pressure _____
Rounds to-date _____
Velocity Barrel No. _____ Type of Gauge _____
Rounds to-date _____ No. _____

	VELOCITY	PRESSURE
1.		
2.		
3.		
4.		
5.		
6.		
7.		
8.		
9.		
10.		
AVERAGE		
OFFSET		
FINAL AVERAGE.		
$\sigma_{(\eta-1)}$		

TECHNICAL SERVICES REPORT – REFERENCE AMMUNITION

PERIODIC ASSESSMENT – CF P&R

APRIL – 2015

LOT NO: 357MAG-158-16WW GAGE: CRUSHER

	VELOCITY	**σ**	**PRESSURE**	**σ**
CCI/Speer	-	-	-	-
Federal	1584	18.0	306	16.7
New River Energetics	-	-	-	-
Hornady	1578	17.1	308	13.2
Nosler	1561	14.0	287	13.0
Remington – Lonoke	1594	18.2	304	16.9
St. Marks Powder	1554	21.0	290	19.0
Winchester-Western	1576	15.4	308	16.2
1st Previous Average	1572		292	
2nd Previous Average	1575		295	
	VELOCITY	**σ**	**PRESSURE**	**σ**
Raw Average	1574		299	
Corrected Average	1574		299	
Inclusion Limits @ 99.95%				
Upper Limit	1609		324	
Lower Limit	1539		274	

ASSESSMENT .....1574.....299

SAMPLE

PROCEDURE:
FRANGIBILITY TESTING

NOTE: Refer to Section III for equipment recommendations and nomenclature.

(1) The collection box shall be thoroughly cleaned of residue from previous test.

(2) The impact plate shall be at an angle of 45° ± 5° to the line of fire.

(3) The collection box shall be positioned to provide a point of impact within ± 2" (51 mm) of the center of the impact plate.

(4) A new retention board shall be positioned on the front of the collection box.

(5) A sample size of ten (10) rounds shall be fired.

(6) The retention board shall be examined for evidence of penetration completely through the board by bullet fragments coming out of the collection box. If any such penetrations are present, the bullet being tested fails to meet the qualification for "frangible".

NOTE: Fragments that are captured in the retention board, even though they have penetrated both panels of the board, shall not be considered a failure, but the fragments shall be added to the collected debris for evaluation against other standards.

(7) Bullet fragments and debris from the test shall be carefully collected to ensure the greatest possible recovery of bullet particles.

(8) The debris collected shall be examined and foreign matter unrelated to the bullet breakup carefully removed.

(9) The collected debris shall be weighed and the weight recorded.

(10) The debris shall be carefully inspected and the largest individual pieces removed and separately weighed, with each weight being separately recorded.

(11) The weights of the individual fragments and collected debris shall be compared to the characteristics presented in Section I.

EQUIPMENT:
VELOCITY & COPPER CRUSHER PRESSURE TESTING

NOTE: Refer to Section III – page 130, ***Supplier Contact Information***, for detailed information on contacting the manufacturers of listed products and the SAAMI Technical Office.

1. Electronic Counter Chronograph – 100 kilohertz, minimum
   a) Oehler Research
   b) Electronic Counters, Inc.
   c) Other equivalent.
2. Table of velocity vs. time of flight or electronic calculator.

   NOTE: Items (1) and (2) may be replaced by a direct-reading velocity chronograph or integrated ballistic instrumentation system with equivalent accuracy and precision.
3. Photoelectric screens
   a) Oehler Research
   b) Electronic Counters, Inc.
   c) Other equivalent.
4. Universal Receiver
   a) Ulysses Machine Company
   b) H-S Precision, Inc.
   c) Other equivalent.
5. Test Barrel (Drawings of test barrels are presented in Section III).
   a) H-S Precision, Inc.
   b) Wiseman
   c) Wilson Arms Company
   d) Hart Rifle Barrels, Inc.
   e) Krieger Barrels, Inc.
   f) Or equivalent.
6. Piston (Section III)
7. Piston and piston hole gauges (Section III)
8. Oil, SAE 30
9. Gas check (Section III)
10. Gas check tools – seating and knockout (Section III)
11. Gas check wax (Section III)
12. Copper crushers

    0.146” x 0.400”
    0.225” x 0.400”

    Manufactured (Section III)
    Winchester Division, Olin Corporation.
13. Tarage table (supplied with each lot of purchased crushers; see Section III, page 110 for sample table)

0.146” x 0.400” when used with 0.146” piston
0.146” x 0.400” when used with 0.206” piston
0.225” x 0.400” when used with 0.206” piston

14. Measuring device for compressed crushers
    a) Micrometer, 1” capacity, minimum, 0.0005” precision.
    b) Platform dial indicator, 1” capacity, minimum, 0.0005” precision.
    c) Other device capable of measuring lengths up to 0.500” with a minimum precision of 0.0005”
15. Reference ammunition. (Refer to Section III – page 127 for supply sources.)

EQUIPMENT: VELOCITY & CONFORMAL PIEZOELECTRIC PRESSURE TESTING

NOTE: Refer to Section III – page 130, ***Supplier Contact Information***, for detailed information on contacting the manufacturers of listed products and the SAAMI Technical Office.

1. Electronic Counter Chronograph – 100 kilohertz, minimum
   a) Oehler Research, Electronic Counters, Inc.
   b) Other equivalent.
2. Table of velocity vs. time of flight or electronic calculator.

   NOTE: Items (1) and (2) may be replaced by a direct-reading velocity chronograph or integrated ballistic instrumentation system with equivalent accuracy and precision.
3. Photoelectric screens
   a) Oehler Research
   b) Electronic Counters, Inc.
   c) Other equivalent.
4. Universal Receiver
   a) Ulysses Machine Company
   b) H-S Precision, Inc.
   c) Other equivalent.
5. Test Barrel (Drawings of test barrels are presented in Section III).
   a) H-S Precision, Inc.
   b) Wiseman
   c) Wilson Arms Company
   d) Hart Rifle Barrels, Inc.
   e) Krieger Barrels, Inc.
   f) Or equivalent.
6. Digital voltmeter
   a) Fluke model 8440
   b) Other equivalent
7. Charge amplifier with 20KHz low pass filter
   a) PCB Piezotronics, Inc. model 443B02
   b) Other equivalent
8. Peak meter
   a) PCB Piezotronics, Inc. model 444A152
   b) Other equivalent

   NOTE: Items (6) and (8) or (6), (7), and (8) may be replaced by an integrated ballistic instrumentation system of equivalent accuracy and precision.
9. Piezoelectric transducer
   a) PCB Piezotronics, Inc. model 117B*xx*
   b) Other equivalent

10. Low noise cable
    a) PCB Piezotronics, Inc. model 003C*xx*
    b) Other equivalent
11. Transducer calibrator
    a) PCB Group; The Modal Shop, Inc.; Model K9905D
    b) Other equivalent
12. Calibration adapter
    a) PCB Piezotronics, Inc. model 090B series
    b) Other equivalent
13. Reference ammunition
    Refer to Section III – page 127 for supply sources.

USAGE OF CRUSHER CYLINDERS IN PRESSURE TESTING

Copper crusher cylinders of the nominal sizes listed below shall be used for pressure tests of centerfire pistol and revolver cartridges.

Crusher cylinders shall not be pre-compressed before use.

A sample tarage table is shown on page 110 for illustrative purposes; only the tarage table furnished with the particular lot of cylinders should be used.

Designation	Nominal Size	PISTON		Average Pressure Limits (CUP/100)
		Diameter	Area	
A	0.146” x 0.400”	0.146”	1/60 inch^2	Less than 350
A	0.146” x 0.400”	0.206”	1/30 inch^2	Less than 240
C	0.225” x 0.400”	0.206”	1/30 inch^2	240 and greater

It is recommended that pressures be recorded in “Copper Units of Pressure”, or “CUP”.*

* - The designation “Copper Units of Pressure” (“CUP”) was adopted in 1969, to replace the previous designation of “pounds per square inch.” Advances in the art of pressure-sensing devices had shown that pressures recorded by deformation of copper crusher cylinders are not necessarily a true measure of pounds per square inch for the transient phenomena encountered in sporting arms ammunition.

SAMPLE TARAGE TABLE
COPPER CRUSHER CYLINDERS
0.225” DIAMETER, 0.400” LONG
FOR USE WITH 0.206” DIAMETER PISTON
AREA = 1/30 SQUARE INCH

*CUP in units of 100

Final Length	Pressure CUP*	Final Length	Pressure CUP*	Final Length	Pressure CUP*	Final Length	Pressure CUP*
0.399	30	0.359	383	0.319	590	0.279	783
0.398	60	0.358	390	0.318	595	0.278	787
0.397	78	0.357	395	0.317	600	0.277	792
0.396	96	0.356	400	0.316	605	0.276	797
0.395	106	0.355	405	0.315	610	0.275	802
0.394	117	0.354	411	0.314	614	0.274	807
0.393	127	0.353	416	0.313	619	0.273	812
0.392	138	0.352	421	0.312	623	0.272	816
0.391	150	0.351	427	0.311	628	0.271	821
0.390	158	0.350	433	0.310	633	0.270	826
0.389	167	0.349	438	0.309	637	0.269	831
0.388	175	0.348	444	0.308	642	0.268	836
0.387	184	0.347	450	0.307	647	0.267	840
0.386	193	0.346	455	0.306	651	0.266	845
0.385	202	0.345	460	0.305	656	0.265	850
0.384	211	0.344	466	0.304	661	0.264	855
0.383	219	0.343	471	0.303	666	0.263	860
0.382	226	0.342	477	0.302	670	0.262	864
0.381	234	0.341	483	0.301	675	0.261	869
0.380	241	0.340	488	0.300	680	0.260	874
0.379	248	0.339	493	0.299	685	0.259	879
0.378	255	0.338	497	0.298	690	0.258	884
0.377	263	0.337	502	0.297	695	0.257	888
0.376	270	0.336	507	0.296	700	0.256	893
0.375	277	0.335	511	0.295	705	0.255	898
0.374	284	0.334	516	0.294	710	0.254	903
0.373	290	0.333	521	0.293	715	0.253	908
0.372	297	0.332	526	0.292	720	0.252	913
0.371	304	0.331	531	0.291	725	0.251	917
0.370	311	0.330	535	0.290	729	0.250	922
0.369	318	0.329	540	0.289	734		
0.368	325	0.328	545	0.288	739		
0.367	332	0.327	550	0.287	744		
0.366	339	0.326	555	0.286	749		
0.365	345	0.325	560	0.285	754		
0.364	351	0.324	565	0.284	759		
0.363	358	0.323	570	0.283	764		
0.362	364	0.322	575	0.282	768		
0.361	370	0.321	580	0.281	773		
0.360	376	0.320	585	0.280	778		

SAMPLE

NOTE: Tarage tables are established for each lot of cylinders. Only the table furnished by the manufacturer with each shipment of cylinders should be used.

CRUSHER CYLINDERS: DIMENSIONS – 0.146” x 0.400”

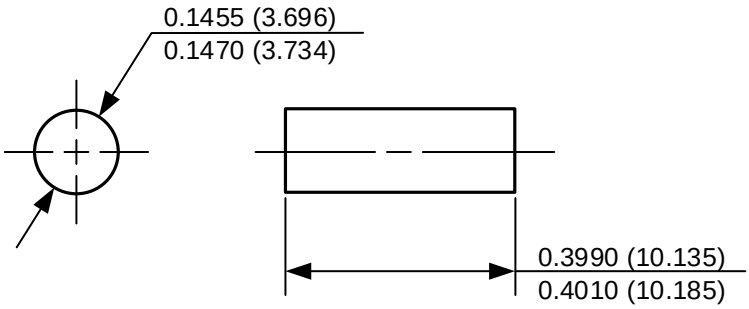

NOTES:

1. Material: Copper Development Association Alloy 102
2. (XX.XX) = Millimeters

CRUSHER CYLINDERS: DIMENSIONS – 0.225” x 0.400”

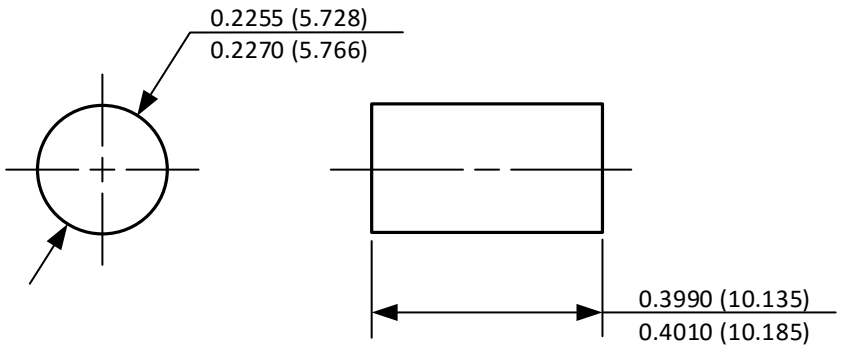

NOTES:

1. Material: Copper Development Association Alloy 102
2. (XX.XX) = Millimeters

EQUIPMENT:
0.146” AND 0.206” GAS CHECKS

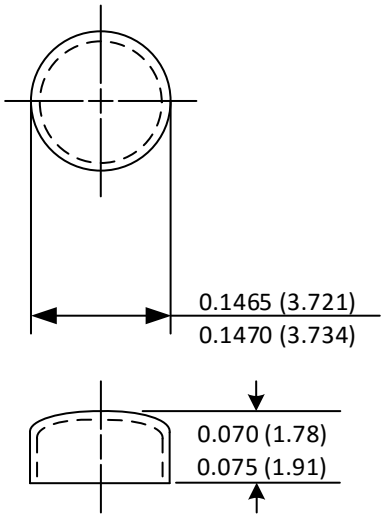

0.146” Gas Check
Material thickness
0.0095 – 0.0105 (0.241 – 0.267)

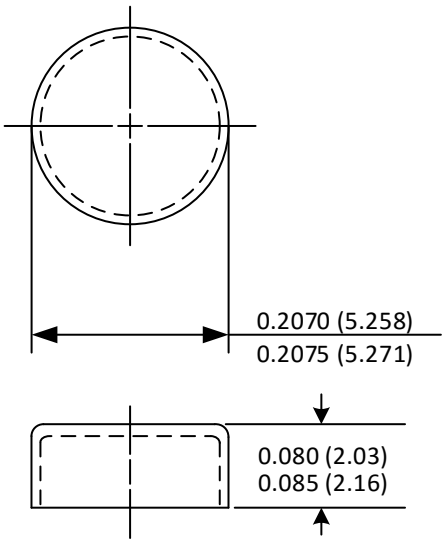

0.206” Gas Check
Material thickness
0.0110 – 0.0115 (0.279 – 0.292)

NOTES

1. Material – Copper Development Association Alloy 210
   Grain size – 0.015 – 0.030mm

2. (X.XXX) = Millimeters

EQUIPMENT:
GAS CHECK TOOLS – SEATING AND KNOCKOUT

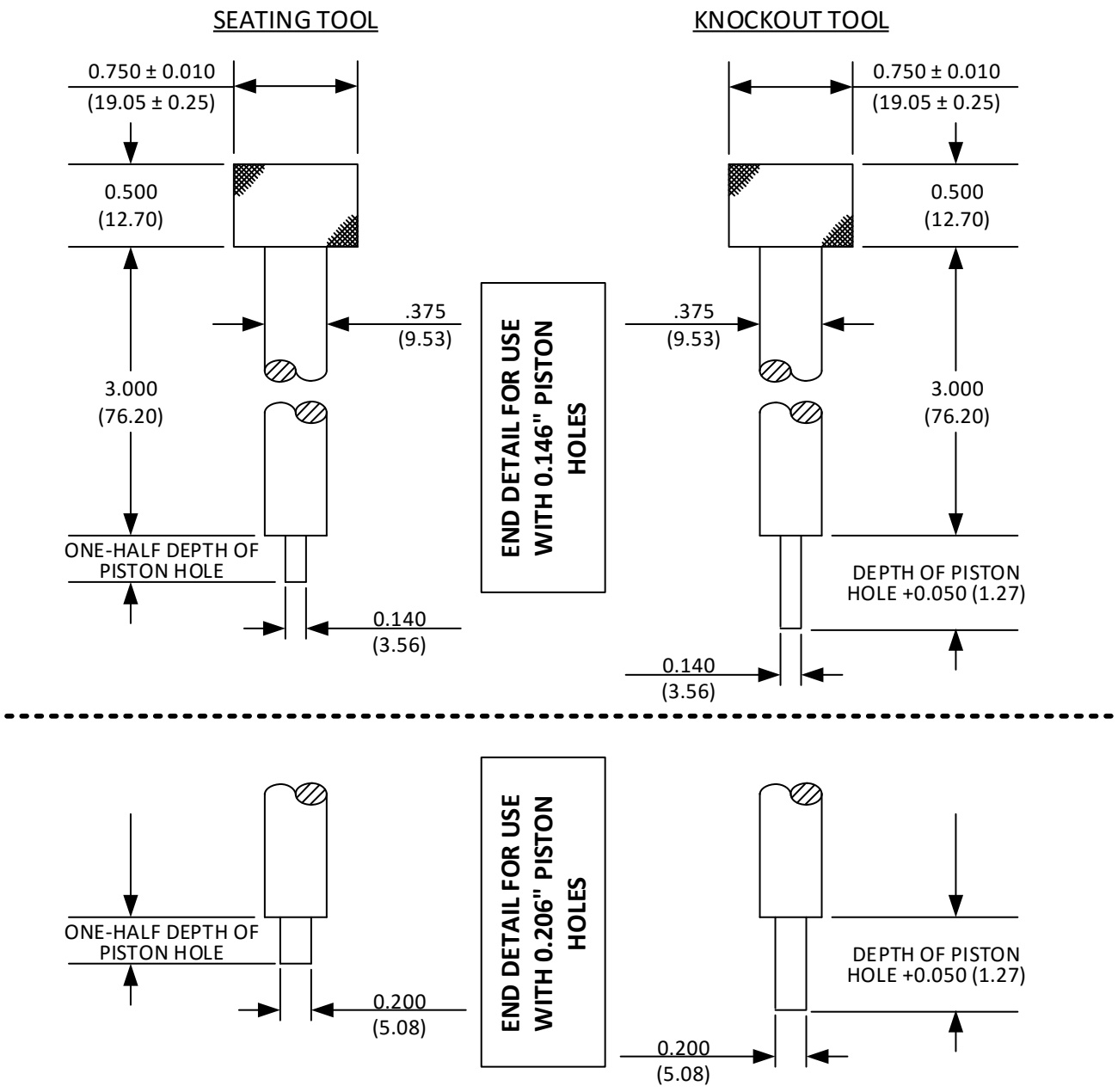

NOTES

1. Material – Copper Development Association Alloy 260
2. Unless otherwise noted, all tolerances ± 0.002 (0.05)
3. (XX.XX) = Millimeters

EQUIPMENT:
GAS CHECK WAX

INGREDIENTS

1. Beeswax .....234.0 grams
2. Paraffin.....6.0 grams
3. Vaseline.....6.0 grams
4. Castor Oil .....14.4 grams
5. Lead oxide (red lead) .....72.0 grams
6. Iron oxide (Ferric oxide).....24.0 grams
7. Rosin ..... 5% by volume

PREPARATION

The ingredients are weighed out in a vessel and heated in a steam bath until the waxes are melted. The mixture is then removed from the steam bath and stirred vigorously until slightly warm. The wax is then rolled out on a flat surface into sticks.

EQUIPMENT:
PISTONS AND PISTON HOLES

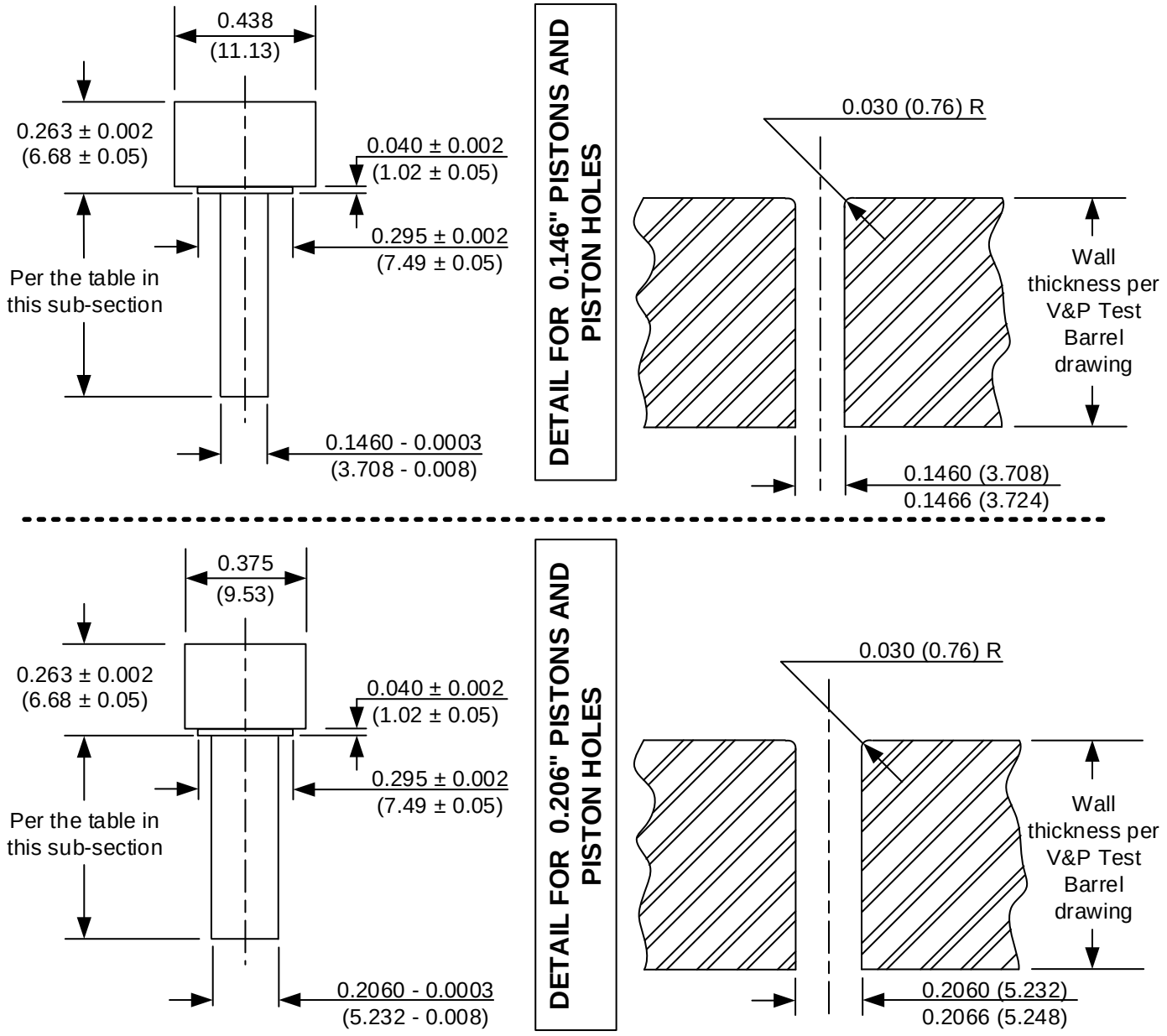

NOTES:

1. Material – High carbon steel – heat treat R_c 62-63
2. Pistons to be suction fit in piston holes.
3. (XX.XX) = Millimeters.

4. Due to the variation in the distance from the chamber wall to the outside edge of the test barrel caused by variation in cartridge diameters, "short" (pressure measurement) pistons for different cartridges are required to be different lengths. This table presents the appropriate short piston lengths for test barrels made in accordance with the drawings and other requirements in Section III.

Cartridge	**Piston Diameter,** (inches)	**Piston Length,** (inches)
9mm Luger	0.206	0.671
9mm Luger +P	Not established	
9x18 Makarov	Not established	
9x23 Winchester	Not established	
10mm Automatic	Not established	
221 Remington Fireball	0.206	0.665
25 Automatic	0.146	0.731
25 North American Arms	Not Established	
30 Luger (7.65mm)	0.206	0.684
32 Automatic	0.206	0.680
32 H&R Magnum	0.206	0.681
32 North American Arms	Not established	
32 Short Colt	0.206	0.690
32 Smith &Wesson	0.206	0.681
32 Smith &Wesson Long	0.206	0.681
327 Federal Magnum	Not established	
356 TSW	Not established	
357 Magnum	0.206	0.660
357 Sig	Not established	
38 Automatic	0.206	0.656
38 Smith &Wesson	0.206	0.657
38 Special / 38 Special +P	0.206	0.660
38 Super Automatic +P	0.206	0.656
380 Automatic	0.206	0.670
40 Smith &Wesson	Not established	
400 Cor-Bon	Not established	

Cartridge	**Piston Diameter,** inches	**Piston Length,** inches
41 Remington Magnum	0.206	0.632
44 Remington Magnum	0.206	0.621
44 S&W Special	0.206	0.621
45 Automatic	0.206	0.624
45 Automatic +P	Not established	
45 Auto Rim	0.206	0.610
45 Colt	0.206	0.610
45 Glock Automatic Pistol	Not established	
45 Winchester Magnum	0.206	0.611
454 Casull	Not established	
460 S&W Magnum	Not established	
475 Linebaugh	Not established	
480 Ruger	Not established	
50 Action Express	Not established	
500 S&W Magnum	Not established	
500 Special	Not established	

EQUIPMENT:
PISTON HOLE GAUGES

PLUG GAUGE

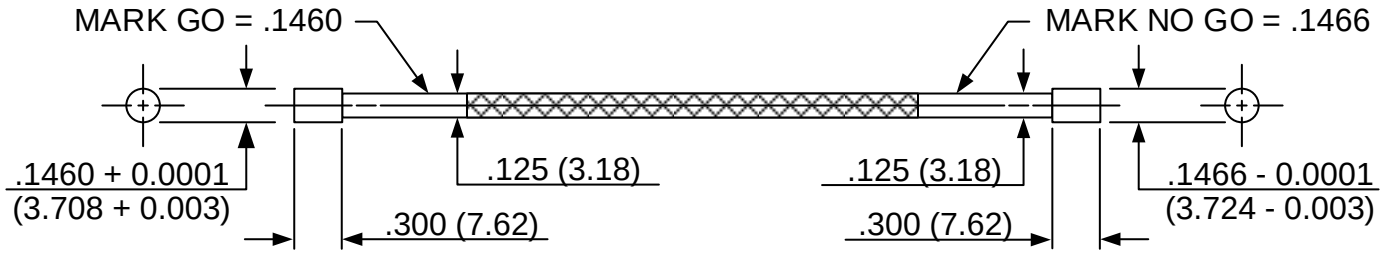

LONGITUDINAL GAUGE

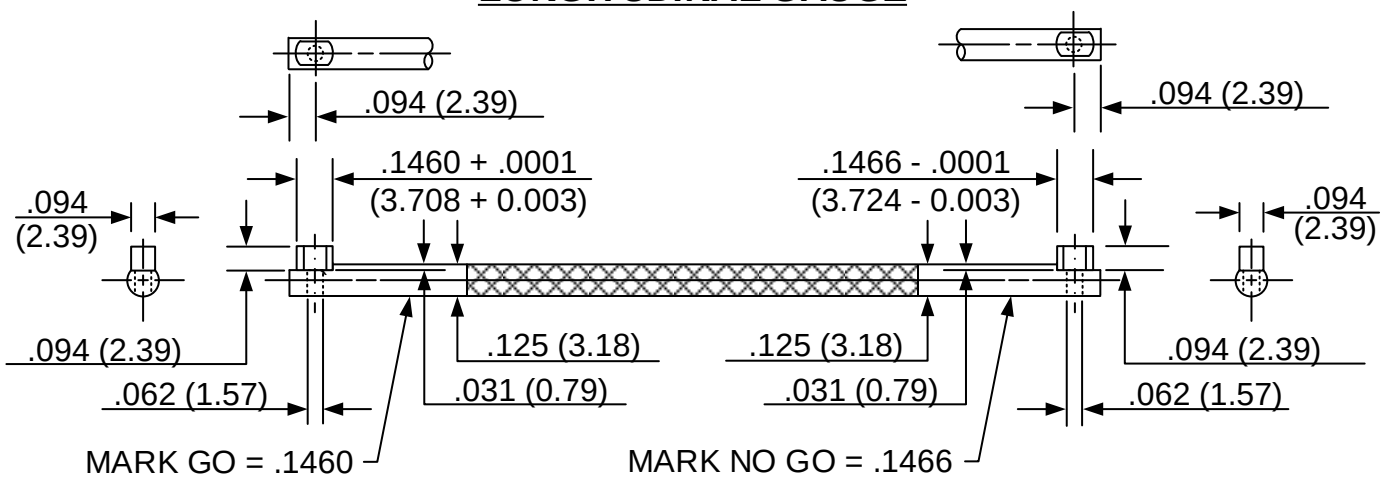

TRANSVERSE GAUGE

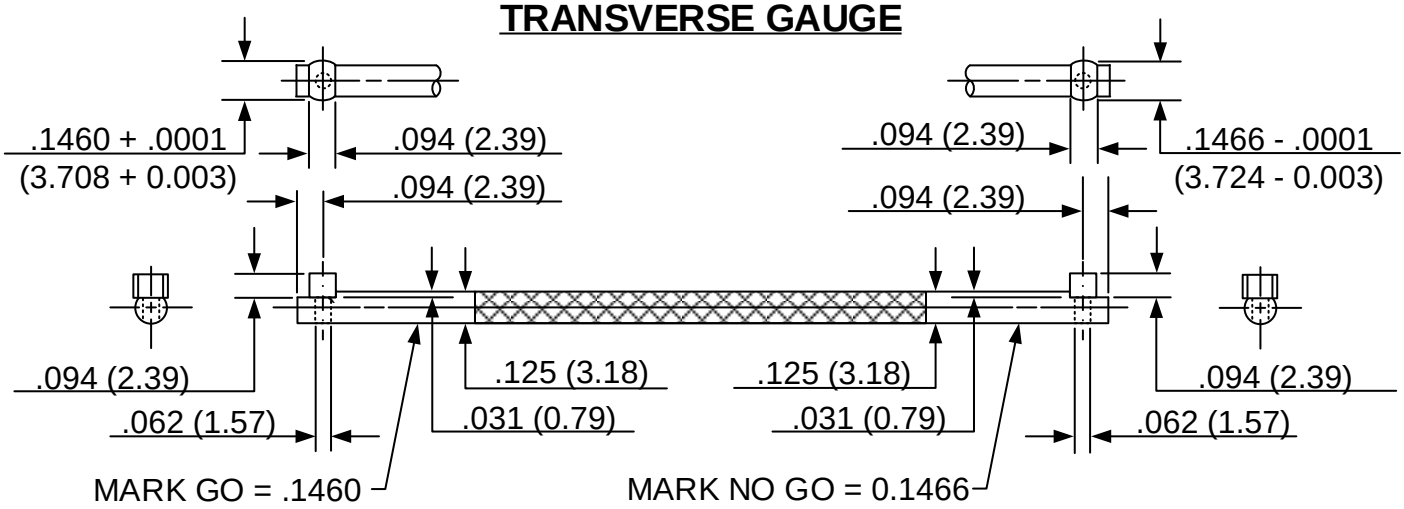

NOTES:

1. General tolerance ±.005 (0.13)
2. Material – Oil hard drill rod AISI -O1 R_c 61-63
3. (XX.XX) = Millimeters

PLUG GAUGE

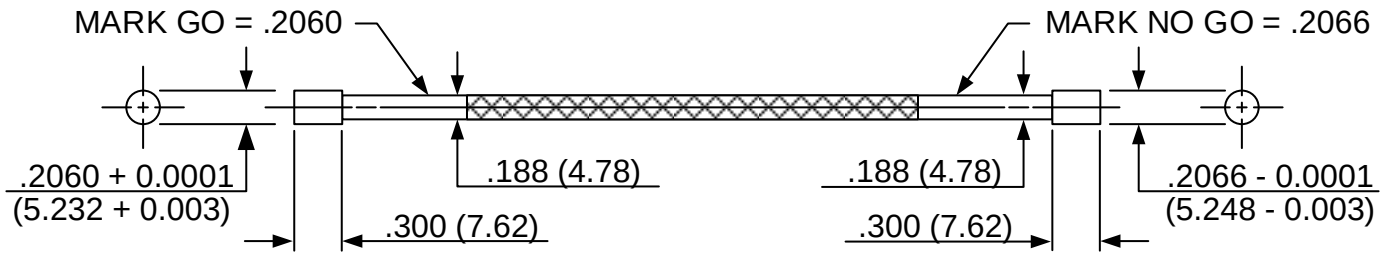

LONGITUDINAL GAUGE

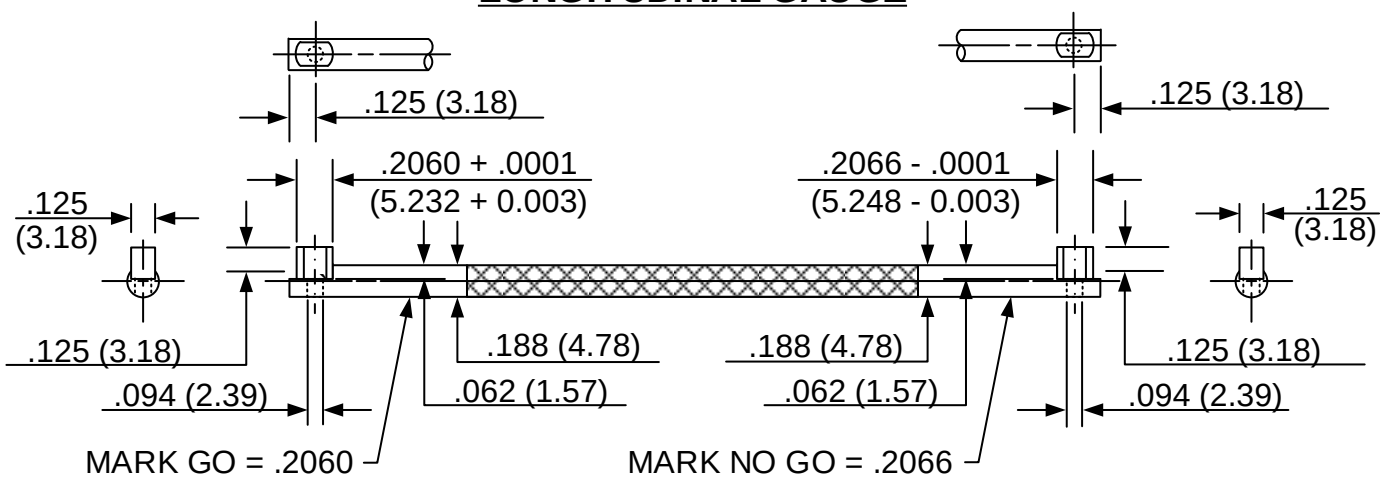

TRANSVERSE GAUGE

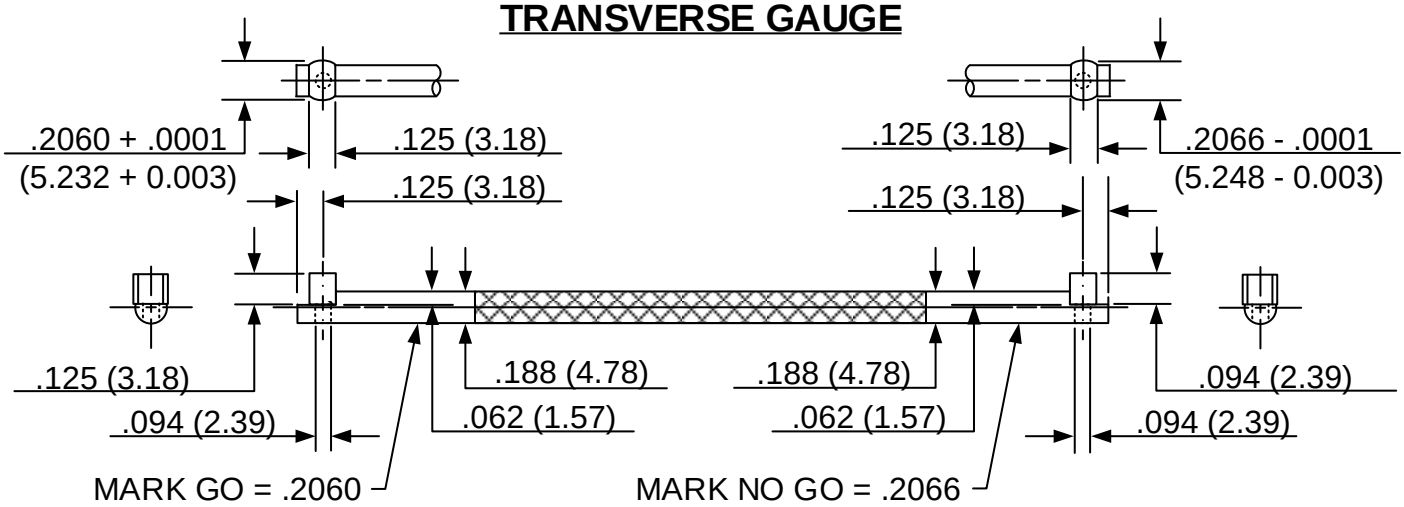

NOTES:

1. General tolerance ±.005 (0.13)
2. Material – Oil hard drill rod AISI -O1 R_c 61-63
3. (XX.XX) = Millimeters

PISTON OIL – PISTON AND GAS CHECK

It is recommended that pistons and gas checks (other than those filled with gas check wax) be lubricated with the following oil:

SAE 30 or equivalent

Viscosity at 210°F (98.9°C)	58 Saybolt seconds universal, minimum 70 Saybolt seconds universal, maximum

The oil should be of non-detergent type.

HEADSPACE GAUGES

FIGURE I
SHOULDER-BREECHING CENTERFIRE PISTOL & REVOLVER HEADSPACE GAUGES

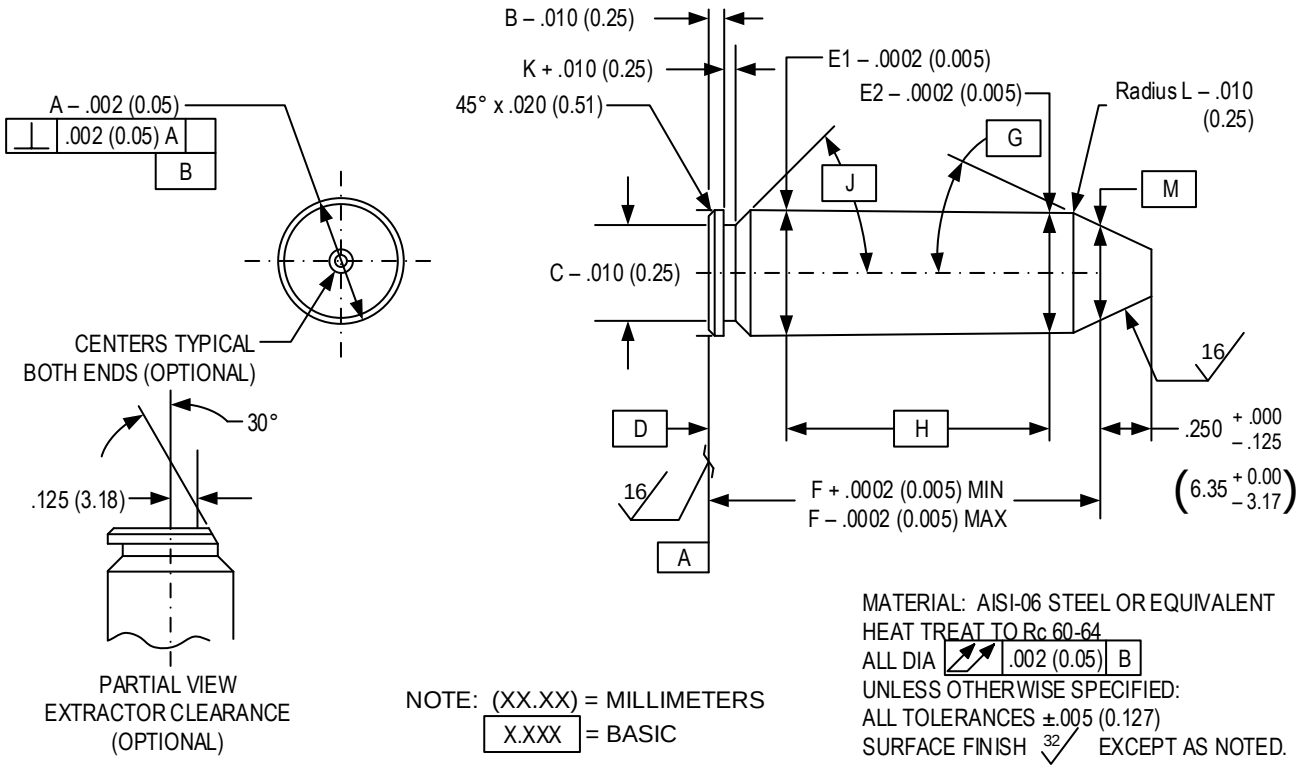

NOTE: (XX.XX) = MILLIMETERS
X.XXX = BASIC

MATERIAL: AISI-06 STEEL OR EQUIVALENT
HEAT TREAT TO Rc 60-64
ALL DIA .002 (0.05) B
UNLESS OTHERWISE SPECIFIED:
ALL TOLERANCES ±.005 (0.127)
SURFACE FINISH 32 EXCEPT AS NOTED.

CARTRIDGE NAME	A	B	C	BASIC D	E1	E2	F MIN	F MAX	BASIC G	BASIC H	BASIC J	K	L	BASIC M
221 Remington Fireball	0.378	0.045	0.332	0.2000	0.3768	0.3629	1.1038	1.1138	23°	0.8000	25°	0.030	0.025	0.3300
	(9.60)	(1.14)	(8.43)	(5.080)	(9.5707)	(9.2177)	(28.037)	(28.291)		(20.320)		(0.76)	(0.64)	(8.382)
25 North American Arms	0.337	0.046	0.297	0.2000	0.3369	0.3339	0.5792	0.5692	30°	0.2600	20°	0.025	0.060	0.3000
	(8.56)	(1.17)	(7.54)	(5.080)	(8.557)	(8.532)	(14.712)	(14.458)		(6.604)		(0.64)	(1.52)	(7.620)
32 North American Arms	0.374	0.045	0.329	0.2000	0.3739	0.3731	0.5411	0.5511	23°	0.2600	20°	0.025	0.060	0.3550
	(9.50)	(1.14)	(8.36)	(5.080)	(9.497)	(9.477)	(13.744)	(13.998)		(6.604)		(0.64)	(1.52)	(9.017)
30 Luger	0.394	0.050	0.347	0.2000	0.3917	0.3817	0.6618	0.6718	18°	0.3750	35°	0.035	0.030	0.3550
	(10.01)	(1.27)	(8.81)	(5.080)	(9.949)	(9.695)	(16.810)	(17.064)		(9.525)		(0.89)	(0.76)	(9.017)
400 Cor-Bon	0.480	0.049	0.400	0.2000	0.4795	0.4760	0.7250	0.7350	25°	0.4400	26°	0.035	0.030	0.4463
	(12.19)	(1.24)	(10.16)	(5.080)	(12.179)	(12.090)	(18.415)	(18.669)		(11.176)		(0.89)	(0.76)	(11.336)

II. GAUGES FOR RIM-BREECHING CARTRIDGES

FIGURE II
RIM-BREECHING CENTERFIRE PISTOL & REVOLVER HEADSPACE GAUGES

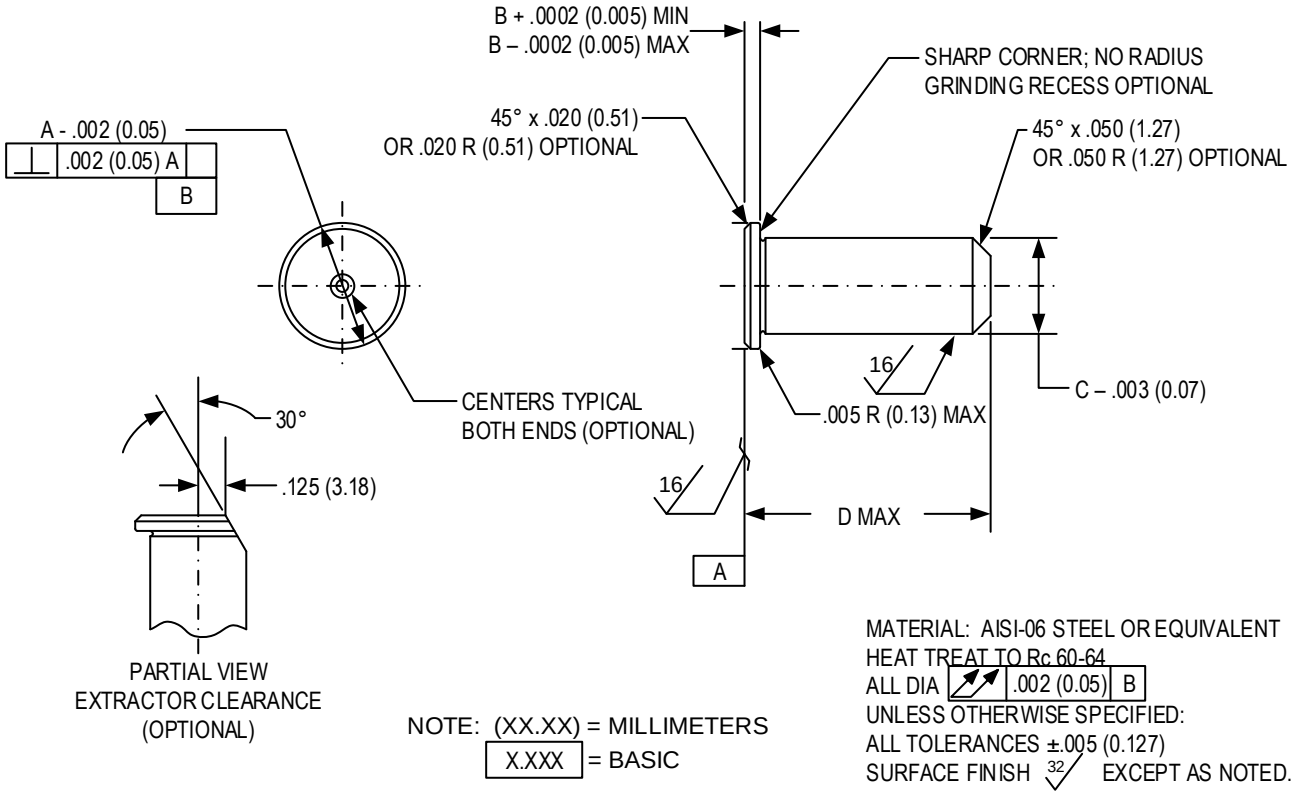

CARTRIDGE NAME	A	B		C	D
		MIN	MAX		
25 Automatic	0.3020 (7.6708)	0.0430 (1.0922)	0.0530 (1.3462)	0.2770 (7.0358)	0.6050 (15.367)
32 Automatic	0.3580 (9.0932)	0.0450 (1.1430)	0.0550 (1.3970)	0.3350 (8.5090)	0.6700 (17.018)
32 H&R Magnum	0.3750 (9.5250)	0.0560 (1.4224)	0.0700 (1.7780)	0.3360 (8.5344)	1.0650 (27.051)
32 Short Colt	0.375 (9.5250)	0.053 (1.3462)	0.067 (1.7018)	0.317 (8.0518)	0.64 (16.256)
32 Smith & Wesson	0.3780 (9.6012)	0.0550 (1.3970)	0.0690 (1.7526)	0.3380 (8.5852)	0.5950 (15.113)

II. GAUGES FOR RIM-BREECHING CARTRIDGES (Cont'd)

CARTRIDGE NAME	A	B		C	D
		MIN	MAX		
32 Smith & Wesson Long	0.3790 (9.627)	0.0560 (1.4224)	0.0700 (1.7780)	0.3360 (8.5344)	0.9100 (23.114)
327 Federal Magnum	0.3750 (9.525)	0.0560 (1.4224)	0.0700 (1.7780)	0.3360 (8.5344)	1.1900 (30.226)
357 Magnum	0.4400 (11.1760)	0.0600 (1.5240)	0.0700 (1.7780)	0.3780 (9.6012)	1.2800 (32.512)
38 Smith & Wesson	0.4400 (11.1760)	0.0560 (1.4224)	0.0700 (1.7780)	0.3840 (9.7536)	0.7650 (19.431)
38 Special	0.4400 (11.1760)	0.0600 (1.5240)	0.0740 (1.8796)	0.3780 (9.6012)	1.1450 (29.083)
38 Special + P	0.4400 (11.1760)	0.0600 (1.5240)	0.0740 (1.8796)	0.3780 (9.6012)	1.1450 (29.083)
38 Special Match	0.4400 (11.1760)	0.0600 (1.5240)	0.0740 (1.8796)	0.3780 (9.6012)	1.1450 (29.083)
41 Remington Magnum	0.4920 (12.4968)	0.0600 (1.5240)	0.0700 (1.7780)	0.4330 (10.9982)	1.2800 (32.512)
44 Remington Magnum	0.5140 (13.0556)	0.0600 (1.5240)	0.0700 (1.7780)	0.4550 (11.5570)	1.2750 (32.385)
44 S&W Special	0.5140 (13.0556)	0.0600 (1.5240)	0.0740 (1.8796)	0.4550 (11.5570)	1.1500 (29.210)
45 Auto Rim	0.5160 (13.1064)	0.0900 (2.2860)	0.1040 (2.6416)	0.4710 (11.9634)	0.8880 (22.555)
45 Colt	0.5120 (13.0048)	0.0600 (1.5240)	0.0740 (1.8796)	0.4790 (12.1666)	1.2750 (32.385)
454 Casull	0.5120 (13.0048)	0.0580 (1.4732)	0.0720 (1.8288)	0.4760 (12.0904)	1.3730 (34.874)
460 S&W Magnum	0.5200 (13.2080)	0.0600 (1.5240)	0.0690 (1.7526)	0.4780 (12.1412)	1.7900 (45.466)
475 Linebaugh	0.5420 (13.7668)	0.0710 (1.8034)	0.0850 (2.1590)	0.5030 (12.7762)	1.3900 (35.306)
480 Ruger	0.5420 (13.7668)	0.0710 (1.8034)	0.0810 (2.0574)	0.5030 (12.7762)	1.2750 (32.385)
500 S&W Magnum	0.5600 (14.2240)	0.0590 (1.4986)	0.0690 (1.7526)	0.5290 (13.4366)	1.6150 (41.021)
500 Special	0.5600 (14.2240)	0.0590 (1.4986)	0.0690 (1.7526)	0.5290 (13.4366)	1.2750 (32.385)

III. GAUGES FOR MOUTH-BREECHING CARTRIDGES

FIGURE III
MOUTH-BREECHING CENTERFIRE PISTOL & REVOLVER HEADSPACE GAUGES

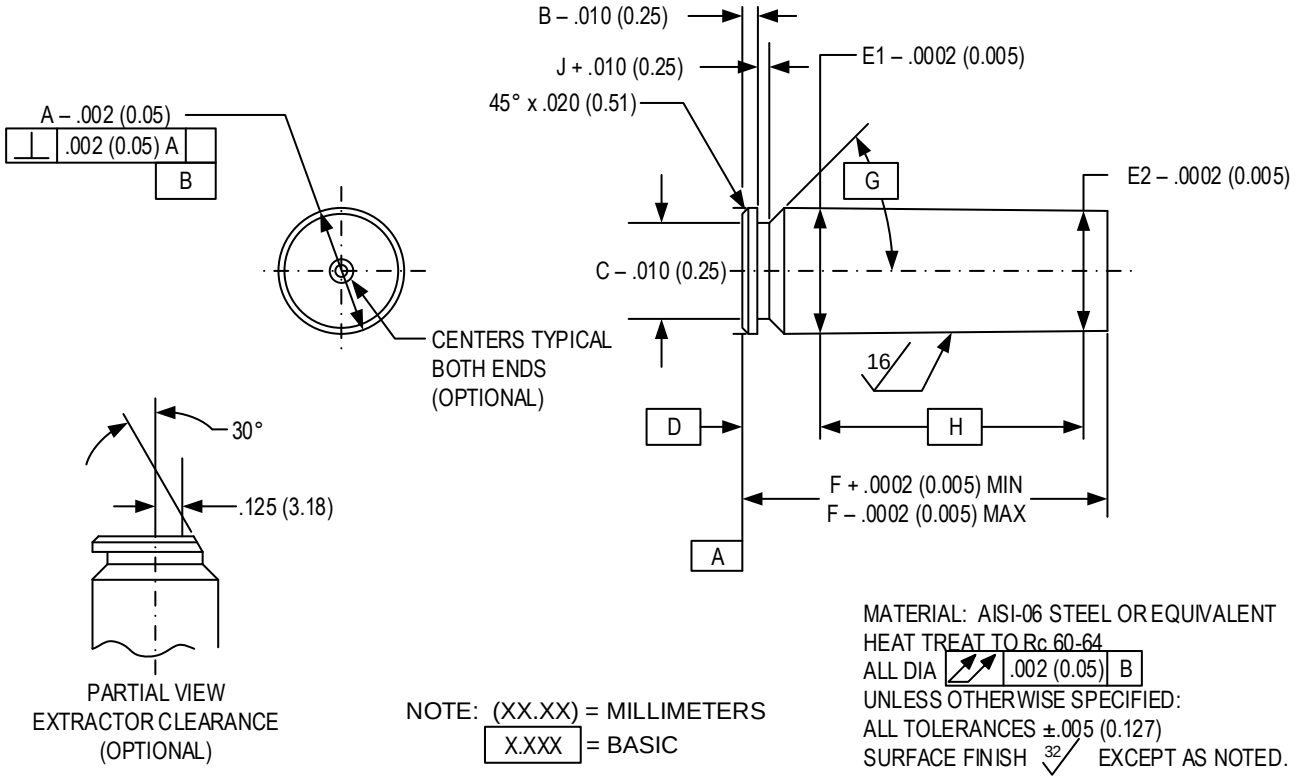

CARTRIDGE NAME	A	B	C	BASIC D	E1	E2	F MIN	F MAX	BASIC G	BASIC H	J
9mm Luger	0.394 (10.01)	0.050 (1.27)	0.347 (8.81)	0.2000 (5.080)	0.3912 (9.936)	0.3819 (9.700)	0.7540 (19.152)	0.7760 (19.710)	35	0.5000 (12.700)	0.035 (0.89)
9mm Luger +P	0.394 (10.01)	0.050 (1.27)	0.347 (8.81)	0.2000 (5.080)	0.3912 (9.936)	0.3819 (9.700)	0.7540 (19.152)	0.7760 (19.710)	35	0.5000 (12.700)	0.035 (0.89)
9x18 Makarov	0.392 (9.95)	0.049 (1.25)	.337 (8.55)	0.2000 (5.080)	0.3959 (10.056)	0.3914 (9.942)	0.7130 (18.110)	0.7250 (18.415)	30	0.4500 (11.430)	0.039 (0.99)
9x23 Winchester	0.394 (10.01)	0.050 (1.27)	.347 (8.81)	0.2000 (5.080)	0.3920 (9.957)	0.3848 (9.774)	0.9000 (22.860)	0.9220 (23.419)	25	0.5000 (12.700)	0.035 (0.89)
10mm Automatic	0.425 (10.80)	0.055 (1.40)	0.347 (8.81)	0.2000 (5.080)	0.4280 (10.871)	0.4242 (10.775)	0.9920 (25.197)	1.0040 (25.502)	45	0.7400 (18.796)	0.045 (1.14)
38 Super Auto +P 38 Automatic	0.406 (10.31)	0.050 (1.27)	0.345 (8.76)	0.2000 (5.080)	0.3886 (9.870)	0.3871 (9.832)	0.8979 (22.807)	0.9179 (23.315)	20	0.6500 (16.510)	0.040 (1.02)
380 Automatic	0.374 (9.50)	0.045 (1.14)	0.329 (8.36)	0.2000 (5.080)	0.3808 (9.672)	0.3772 (9.581)	0.6810 (17.297)	0.7030 (17.856)	20	0.4400 (11.176)	0.025 (0.64)
356 TSW	0.394 (10.01)	0.050 (1.27)	0.347 (8.81)	0.2000 (5.080)	0.3916 (9.947)	0.3813 (9.685)	0.8500 (21.590)	0.8600 (21.844)	35	0.6250 (15.875)	0.035 (0.89)

HEADSPACE GAUGES

CARTRIDGE NAME	A	B	C	BASIC D	E1	E2	F MIN	F MAX	BASIC G	BASIC H	J
357 Sig	0.424 (10.77)	0.055 (1.40)	0.347 (8.81)	0.2000 (5.080)	0.4274 (10.856)	0.4249 (10.792)	0.8650 (21.971)	0.8770 (22.276)	43	0.4620 (11.735)	0.045 (1.14)
40 Smith & Wesson	0.424 (10.77)	0.055 (1.40)	0.347 (8.81)	0.2000 (5.080)	0.4273 (10.853)	0.4242 (10.775)	0.8500 (21.590)	0.8620 (21.895)	45	0.5980 (15.189)	0.045 (1.14)
45 Automatic 45 Auto Match	0.480 (12.19)	0.049 (1.24)	0.400 (10.16)	0.2000 (5.080)	0.4795 (12.179)	0.4743 (12.047)	0.8980 (22.809)	0.9200 (23.368)	26	0.6500 (16.510)	0.035 (0.89)
45 Automatic +P	0.480 (12.19)	0.049 (1.24)	0.400 (10.16)	0.2000 (5.080)	0.4795 (12.179)	0.4743 (12.047)	0.8980 (22.809)	0.9200 (23.368)	26	0.6500 (16.510)	0.035 (0.89)
45 Glock Automatic Pistol	0.470 (11.94)	0.049 (1.24)	0.390 (9.91)	0.2000 (5.080)	0.4792 (12.172)	0.4743 (12.047)	0.7600 (19.304)	0.7720 (19.609)	36	0.5120 (13.005)	0.034 (0.86)
45 Winchester Magnum	0.480 (12.19)	0.049 (1.24)	0.415 (10.54)	0.2000 (5.080)	0.4806 (12.207)	0.4741 (12.042)	1.1980 (30.429)	1.2100 (30.734)	32	0.9650 (24.511)	.035 (0.89)
50 Action Express	0.515 (13.08)	0.060 (1.52)	0.460 (11.68)	0.2000 (5.080)	0.5439 (13.815)	0.5310 (13.487)	1.2850 (32.639)	1.2970 (32.944)	30	1.0000 (25.400)	.038 (0.97)

EQUIPMENT:
REFERENCE AMMUNITION SUPPLY

NOTE: Refer to Section III – page 130, ***Supplier Contact Information***, for detailed information on contacting the manufacturers of listed products and the SAAMI Technical Office.

Centerfire pistol and revolver reference ammunition for the verification of ranges, barrels, and other equipment may be obtained from the manufacturer. Contact the SAAMI Technical Office or see website for detailed information.

The SAAMI Technical Office maintains current assessment data. SAAMI policy does not allow the release of assessment values by the manufacturer of reference ammunition. All assessments are to be supplied by the SAAMI Technical Office.

EQUIPMENT:
REFERENCE AMMUNITION ORDER PROCEDURE

Each order should contain the following information, in the following order:

1. Number of rounds desired. (See NOTE, below.)
2. Appropriate order symbol, when given.
3. Designation "SAAMI Reference Ammunition".
4. Cartridge name.
5. SAAMI lot number. (Current lot numbers are given on latest assessment value sheets issued by the SAAMI Technical Office.)

   EXAMPLE:
   200 rounds, Order symbol SA9LP
   SAAMI Reference Ammunition
   9mm Luger
   SAAMI Lot 9MM-115-16WW

NOTE: Recommended maximum order = 200 rounds. If an individual user has requirements for larger quantities, refer to Section II - page 95.

Manufacturers of SAAMI reference ammunition may limit the order quantities honored to the recommended maximum in order to prevent premature consumption of a lot.

It is up to the discretion of the manufacturer to produce lots of sufficient size to reasonably provide a five-year supply.

EQUIPMENT:
FRANGIBILITY TESTING

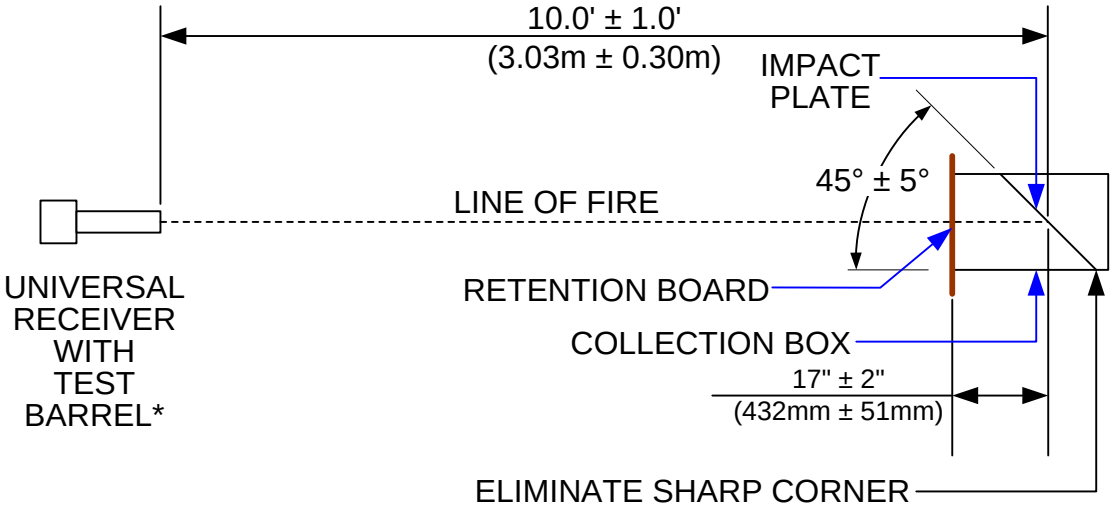

RETENTION BOARD
CORRUGATED CARDBOARD, “200# MINIMUM” (as defined by American Paper Institute [“API”]), ARRANGED TO CONFINE BULLET DEBRIS WITHIN THE COLLECTION BOX

IMPACT PLATE
AR500 STEEL, 0.50” (12.7) THICK

COLLECTION BOX
MILD STEEL, .25" (6.4) BOTTOM, .125" (3.2) THICK SIDES & TOP; 12" X 12" (305 X 305) W X H MIN; 24" X 24" (610 X 610) W X H MAX, LENGTH OPTIONAL.

* - For cartridges commonly in use by Law Enforcement in pistols, a standard V&P test barrel shall be used. For cartridges commonly in use by Law Enforcement in revolvers, a standard **vented** V&P test barrel shall be used.

SCHEMATIC FRANGIBILITY TEST LAYOUT

SUPPLIER CONTACT INFORMATION

Contact the SAAMI Technical Office using the information below or visit www.saami.org for a current list of supplier contact information.

SAAMI Technical Office ..... *SAAMI Information*

11 Mile Hill Road
Newtown, CT 06470
Phone: 203-426-1320
E-mail:
Website: www.saami.org

EQUIPMENT:
SCHEMATIC LAYOUT OF VELOCITY SCREENS

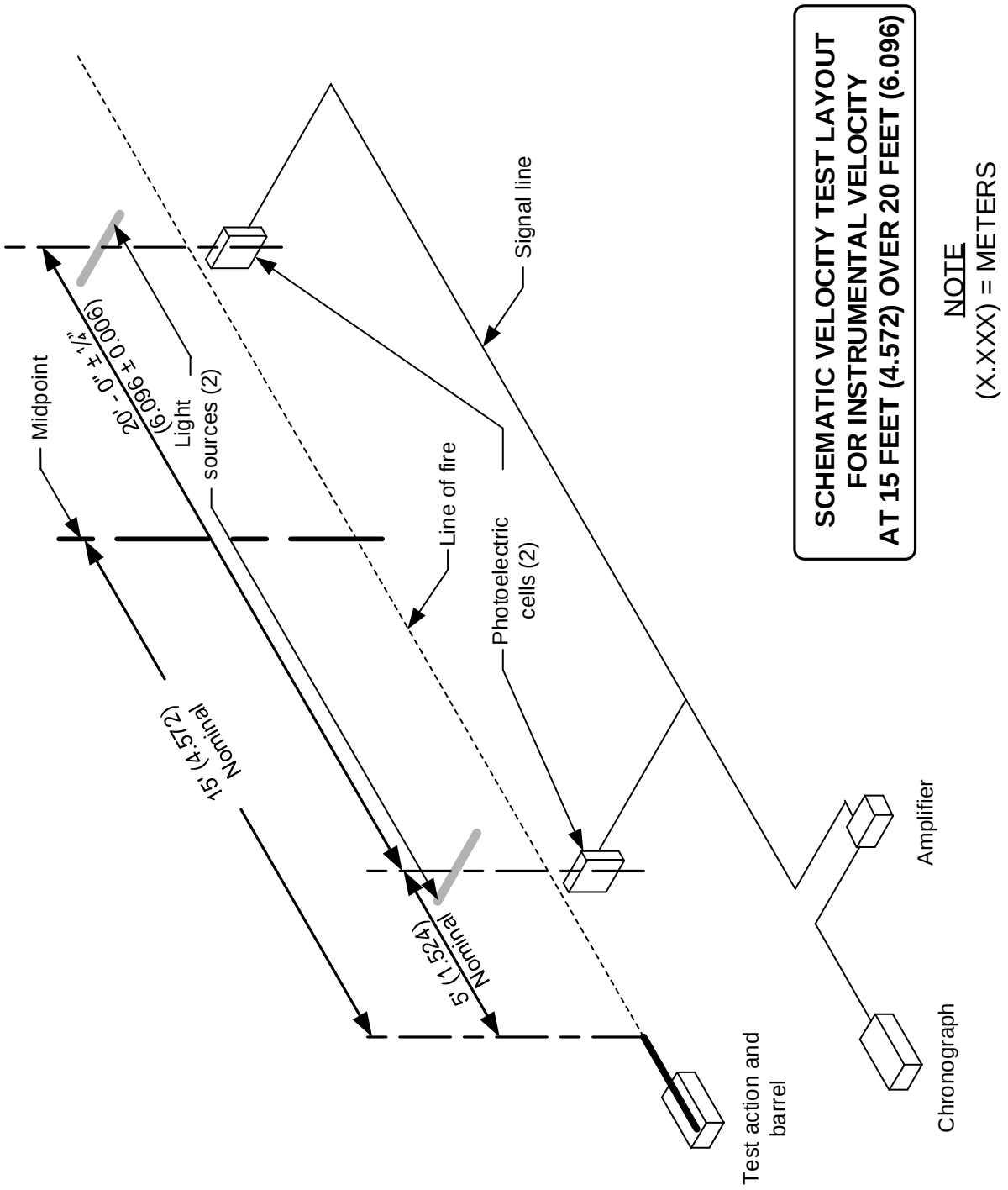

EQUIPMENT:
UNIVERSAL RECEIVER COLLAR & TEST BARREL

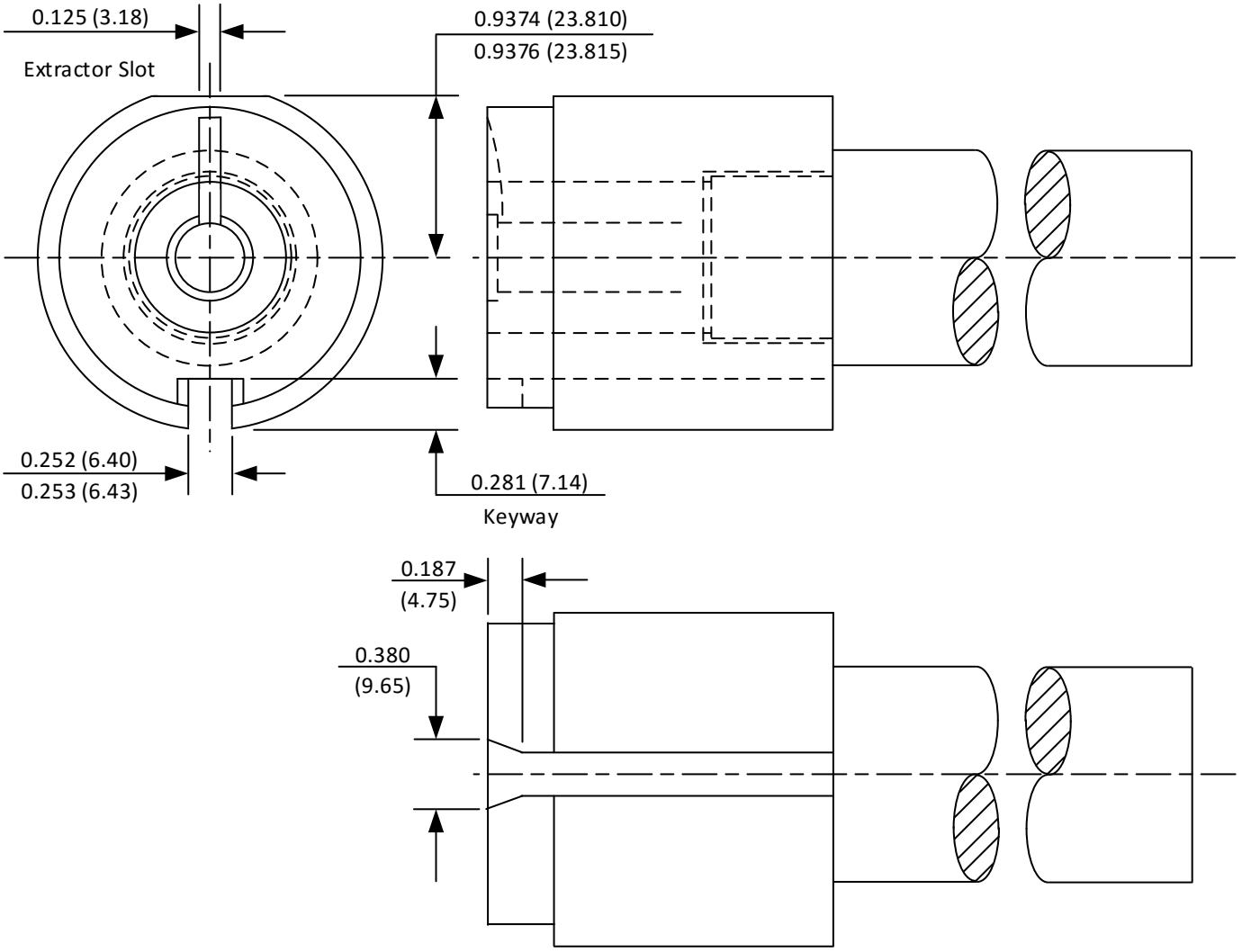

FOR DETAIL INFORMATION SEE FOLLOWING PAGE

NOTE: (XX.XX) = Millimeters

EQUIPMENT: UNIVERSAL RECEIVER COLLAR & TEST BARREL

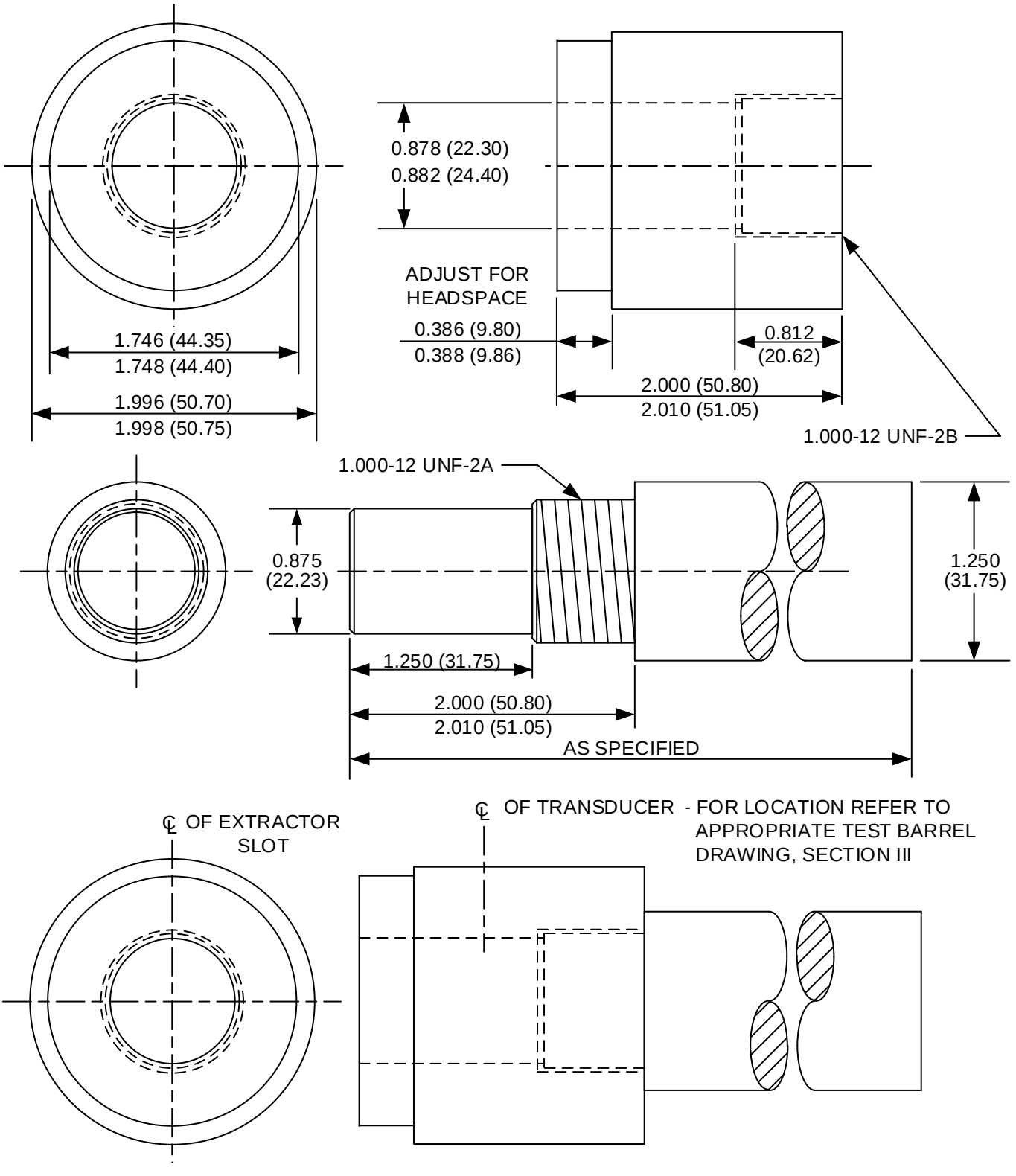

DRAW BARREL AND COLLAR TIGHT.
TRANSDUCER HOLE AND HEAD CUTS MADE AFTER ASSEMBLY - SEE PAGE 134
NOTE: (XX.XX) = MILLIMETERS

MATERIAL: RESULFURIZED 4140 STEEL HEAT TREAT PRIOR TO MACHINING TO BRINELL HARDNESS 277 TO 321 (R_c 29 TO 35)
ACCEPTABLE ALTERNATE: 416 STAINLESS STEEL

UNIVERSAL RECEIVER TEST BARREL: INSTALLATION OF PRESSURE TRANSDUCERS

1. LARGE [.250 (6.35)] DIAMETER GAUGES

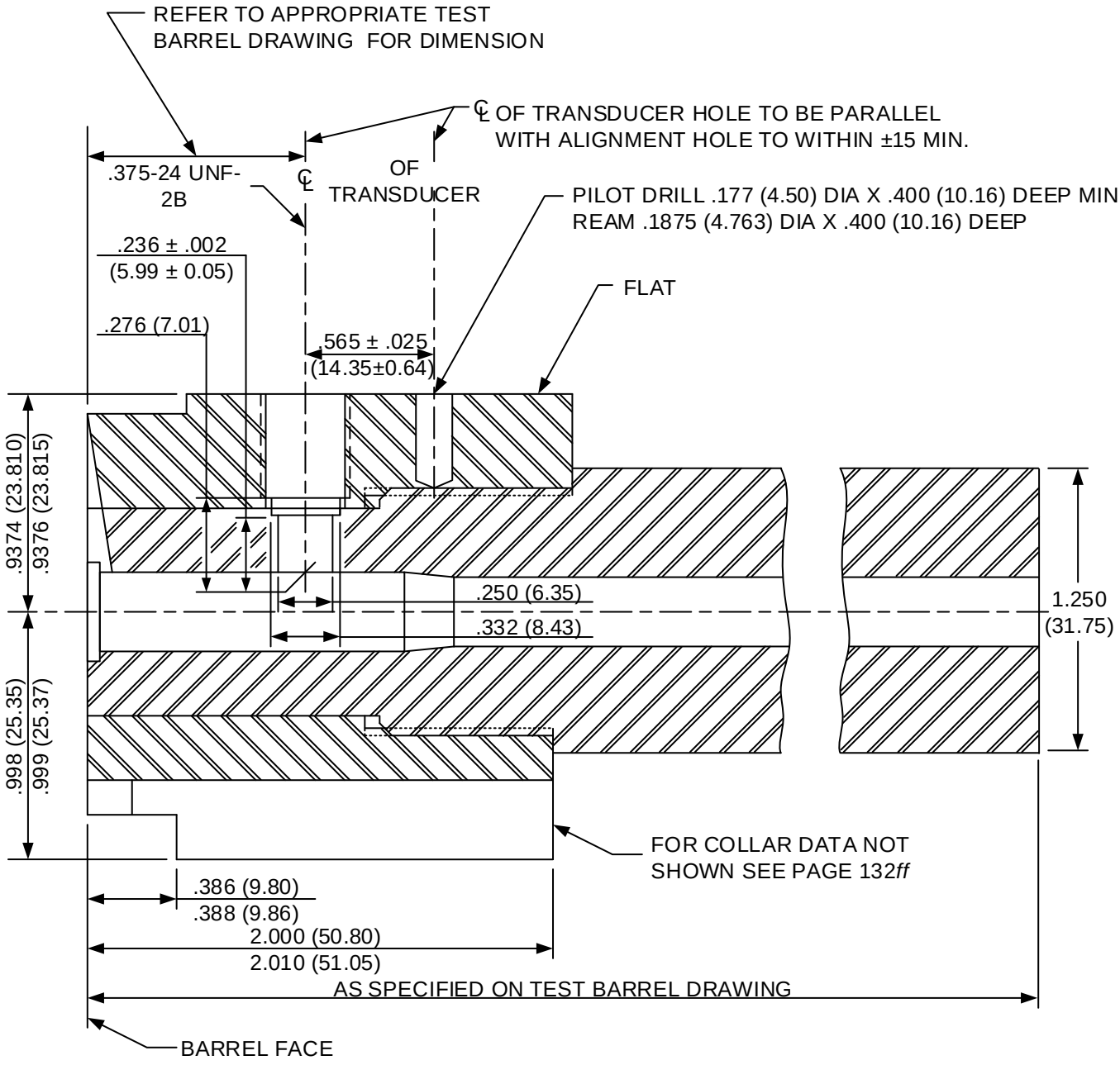

NOTE
(XX.XX) = MILLIMETERS

2. "SMALL" [.196 (4.98)] DIAMETER GAUGES

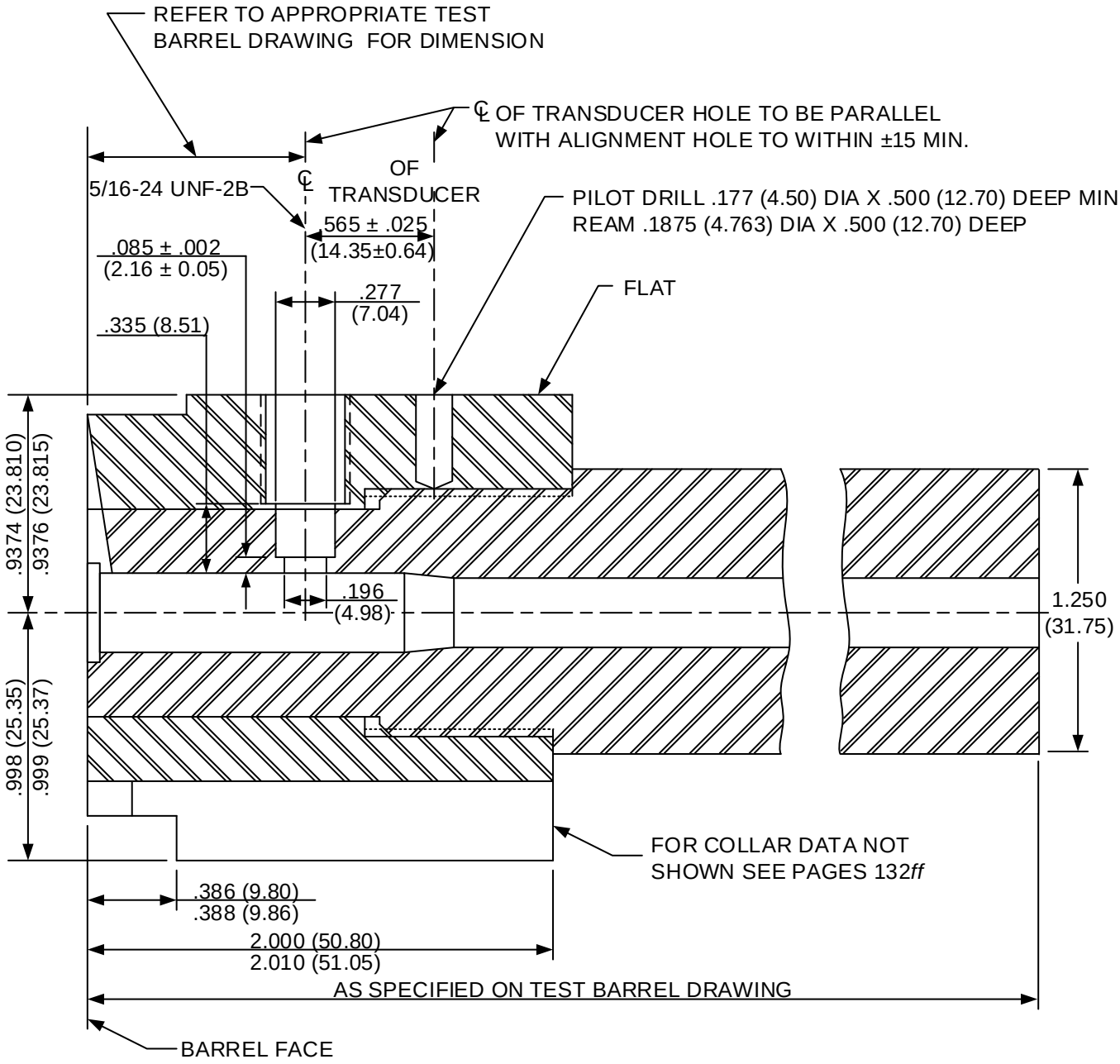

NOTE
(XX.XX) = MILLIMETERS

EQUIPMENT: TRANSDUCER CALIBRATION FIXTURE PLUG WITH O-RING SEAL (OPTIONAL)*

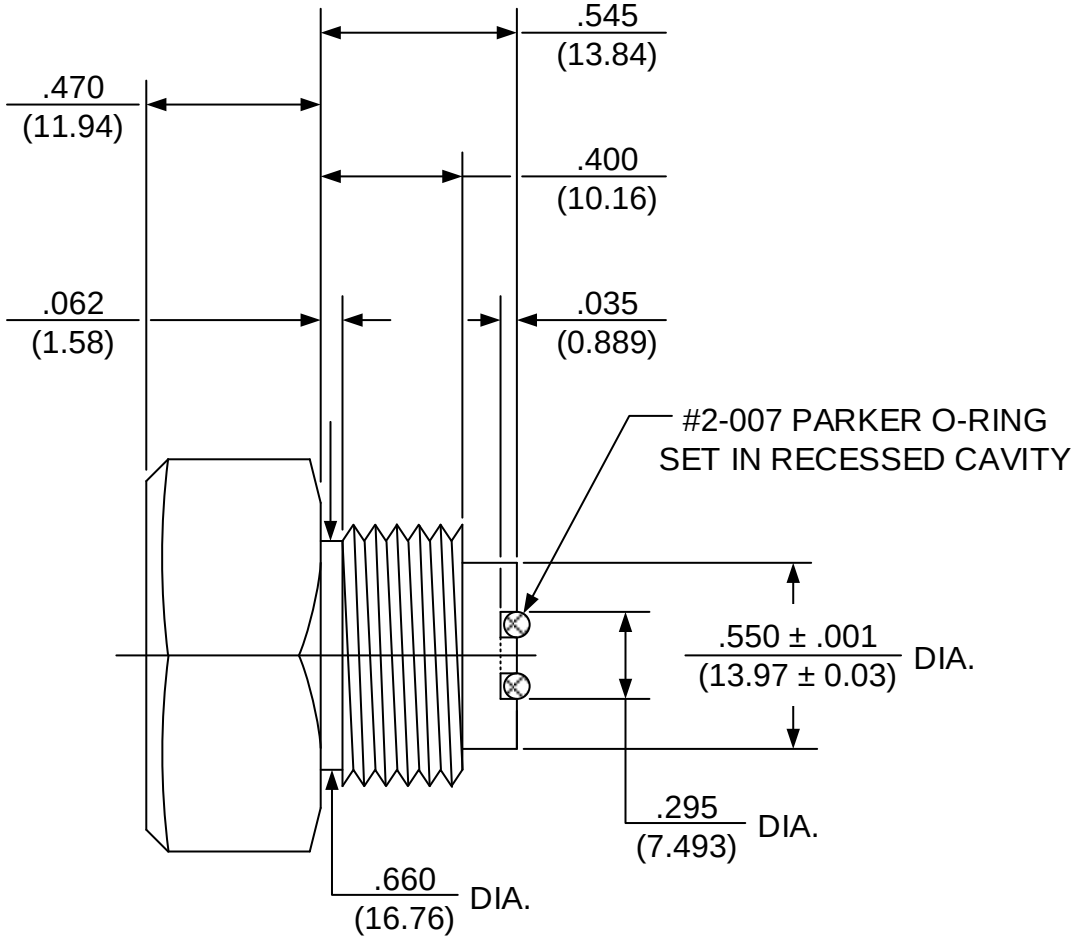

NOTES

MATERIAL: ¾-16 UNF X 1½ LONG R.H. (GRADE 8) STEEL HEX BOLT
ALL DIA. TO BE CONCENTRIC WITHIN .001 T.I.R.
UNLESS OTHERWISE NOTED ALL TOLERANCES ARE ± .005 (0.13)
* NOT TO EXCEED 65,000 PSI.

TRANSDUCER LOCATION CRITERIA

I. Transducer Location

The following criteria for transducer location positioning should be followed when designing new cartridges. In those cases where following the criteria will cause the transducer to be located over current or projected bullet heel locations, case cannelures, or other undesirable areas, the best alternate location should be chosen. In general, the location should be as close to the bullet heel as practical.

A. Straight-walled Cartridge Cases

The centerline of the transducer shall be located behind the heel of the bullet by an amount equal to one-half the transducer diameter plus 0.005” – 0.010” (0.13 mm – 0.25 mm). This criterion applies to both large diameter [0.250” (6.35 mm)] and small diameter [0.194” (4.93 mm)] transducers.

B. Bottleneck Cartridge Cases

The centerline of the transducer shall be located behind the shell case shoulder intersection by an amount of 0.175” (4.44 mm) for large diameter [0.250” (6.35 mm)] transducers and by 0.150” (3.80 mm) for small diameter [0.194” (4.93 mm)] transducers.

II. Transducer Diameter

A. Large Diameter [0.250” (6.35 mm)] Transducers

This size is selected when the chamber diameter at transducer centerline is equal to or greater than 0.350” (8.89 mm).

B. Small Diameter [0.194” (4.93 mm)] Transducers

This size is selected when the chamber diameter at transducer centerline is less than 0.350” (8.89 mm).

EQUIPMENT:
VENTED TEST BARREL - GENERAL

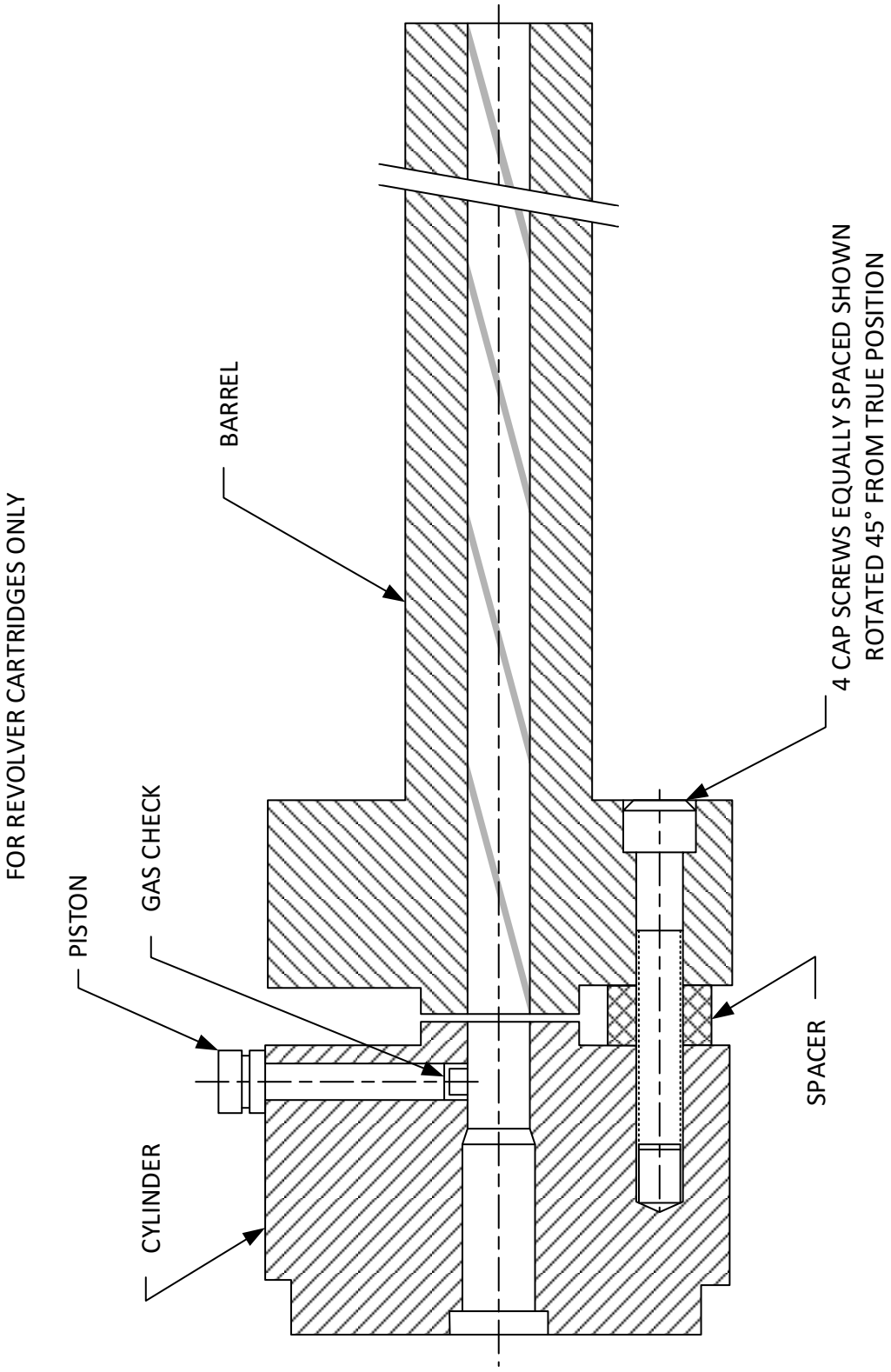

STANDARD V&P TEST BARRELS - GENERAL: PROCEDURES FOR DIMENSIONING CHAMBERS

Chamber and bore dimensions of velocity and pressure test barrels shall conform to the dimensions of the chamber and bore at Maximum Material Condition (MMC) for each cartridge as originally introduced. Fabrication tolerances, however, are much reduced.

It is recognized that changes may be made to cartridge or chamber dimensions in order to improve the velocity-pressure relationship, accuracy or functioning in pistols or revolvers as production experience indicates. However, none of these changes should be of such nature that they would cause a significant increase in pressure level of a given lot of ammunition.

No changes shall be made to velocity and pressure barrel dimensions which would result in a reduction of the recorded pressure level of any given lot of ammunition. This would result in the possibility of future lots of ammunition being loaded with increased powder charges, which would cause increased pressure in existing pistols and revolvers.

Production barrels may be adapted for velocity and pressure testing provided that they conform to all dimensions shown on the appropriate test barrel drawing.

STANDARD V&P TEST BARRELS - GENERAL: PROCEDURES FOR MEASURING BARREL LENGTH

Centerfire pistol and revolver solid test barrels are measured by inserting a rod down the bore from the muzzle until it touches the breech face with the action closed and the firing pin retracted.

Vented test barrels for revolver ammunition are measured by inserting a rod down the bore from the muzzle to the rear end of the barrel.

A stop collar or other means is utilized to mark the point on the rod adjacent to the most forward part of the barrel or the bottom of the counterbore in barrels having a counterbore recess at the muzzle.

The rod is removed and the distance from the mark to the end of the rod is measured. This measurement is recorded as the barrel length.

9mm Luger / 9mm Luger +P V&P Test Barrel

Issued: 11/06/1979 Revised: 08/09/2015

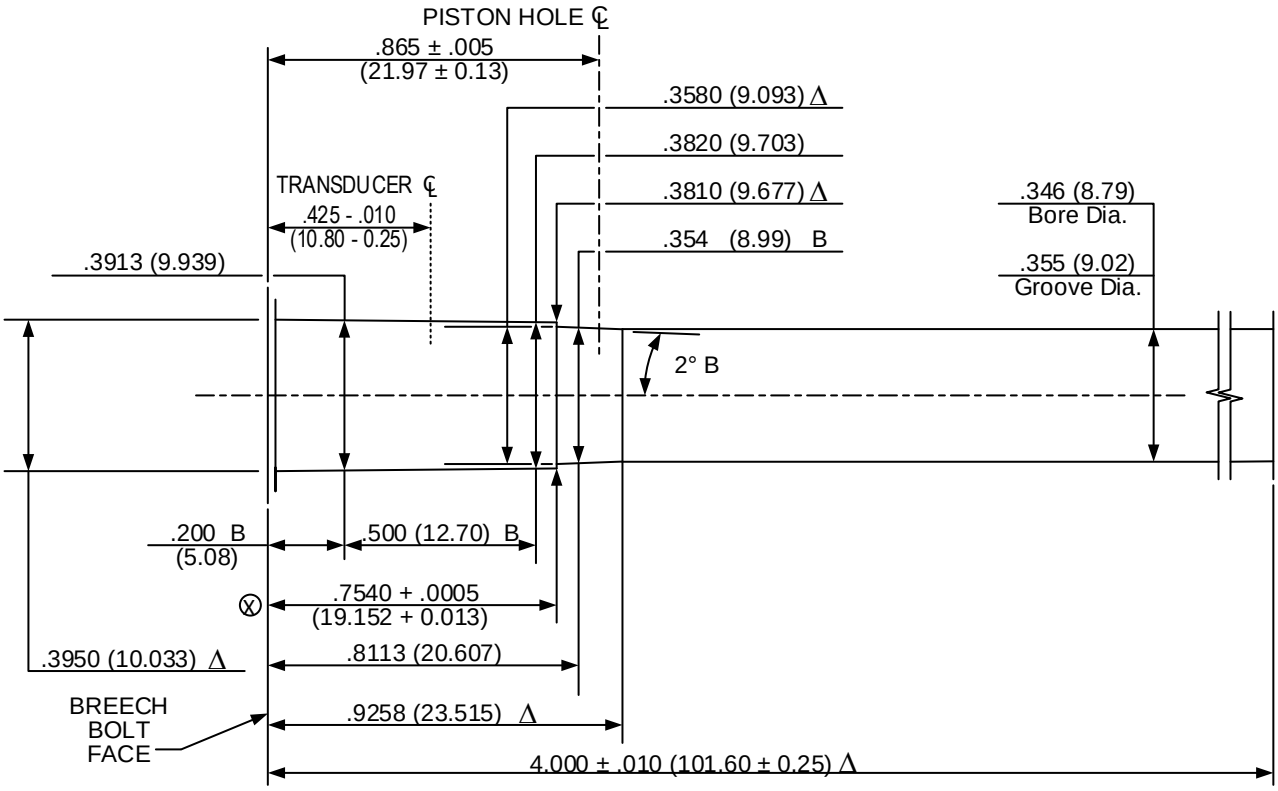

DO NOT SCALE FROM DRAWING

NUMBER OF GROOVES: 6
WIDTH OF GROOVES: .100 + .002 (2.54 + 0.05)
TWIST RATE: 10 (254) R.H.
DIAMETER OF PISTON HOLE: .206 (5.23)
TRANSDUCER DIAMETER: .250 (6.35)

LAND AND GROOVE DIMENSIONS TO BE WITHIN TOLERANCES THROUGHOUT LENGTH OF BARREL.

UNLESS OTHERWISE NOTED, ALL DIAMETERS +.0005 (0.013) LENGTH TOLERANCE + .005 (0.13)

NOTE:
B = BASIC Δ = REFERENCE DIMENSION Ⓧ = HEADSPACE DIMENSION
* DIMENSIONS ARE TO INTERSECTIONS OF LINES (XX.XX) = MILLIMETERS
ALL CALCULATIONS APPLY AT MAXIMUM MATERIAL CONDITION (MMC)

9 x 18 Makarov V&P Test Barrel

ISSUED: 07/28/1993 REVISED: 08/09/2015

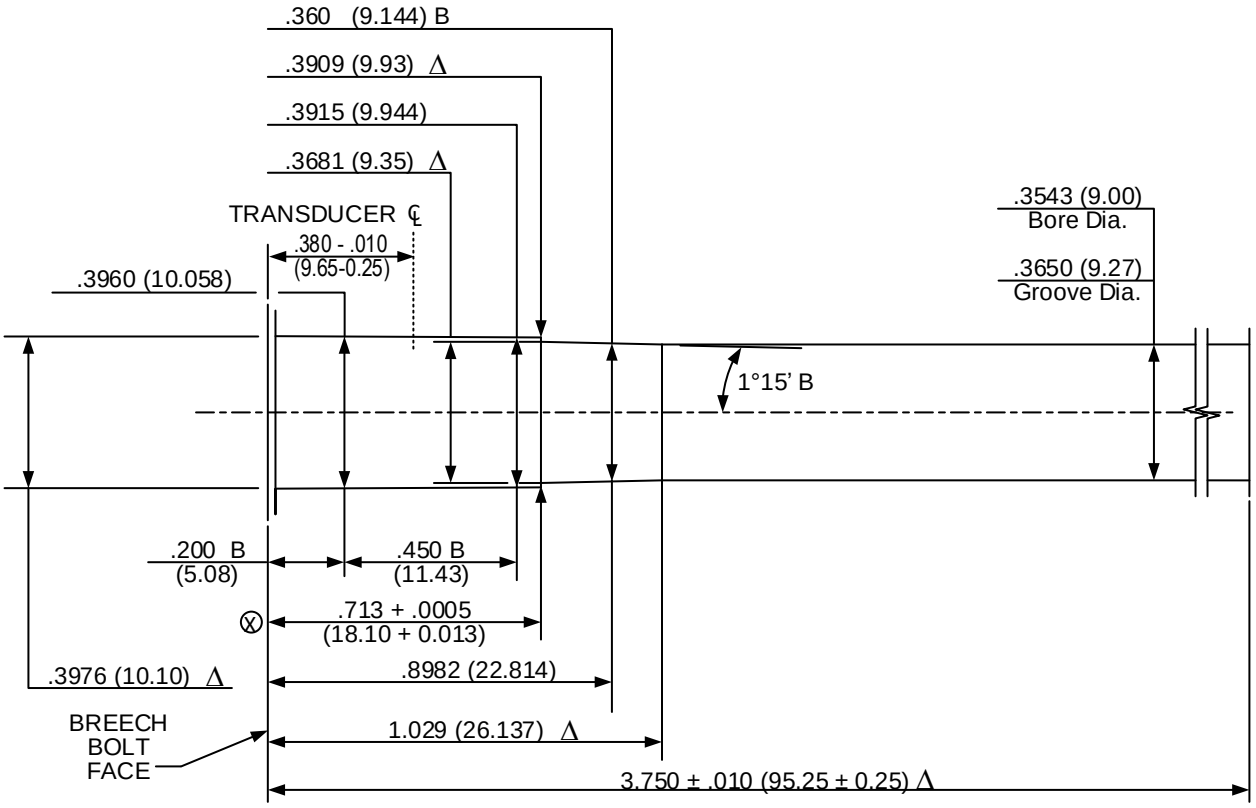

DO NOT SCALE FROM DRAWING

NUMBER OF GROOVES: 4
WIDTH OF GROOVES: .177 + .002 (4.50 + 0.05)
TWIST RATE: 9.45 (240) R.H.
DIAMETER OF PISTON HOLE: Crusher pressures not established.
TRANSDUCER DIAMETER: .250 (6.35)

LAND AND GROOVE DIMENSIONS TO BE WITHIN TOLERANCES THROUGHOUT LENGTH OF BARREL.

UNLESS OTHERWISE NOTED, ALL DIAMETERS +.0005 (0.013) LENGTH TOLERANCE + .005 (0.13)

NOTE:
B = BASIC Δ = REFERENCE DIMENSION Ⓧ = HEADSPACE DIMENSION
* DIMENSIONS ARE TO INTERSECTIONS OF LINES (XX.XX) = MILLIMETERS
ALL CALCULATIONS APPLY AT MAXIMUM MATERIAL CONDITION (MMC)

9 x 23 Winchester V&P Test Barrel

Issued: 06/04/1997 Revised: 08/04/2015

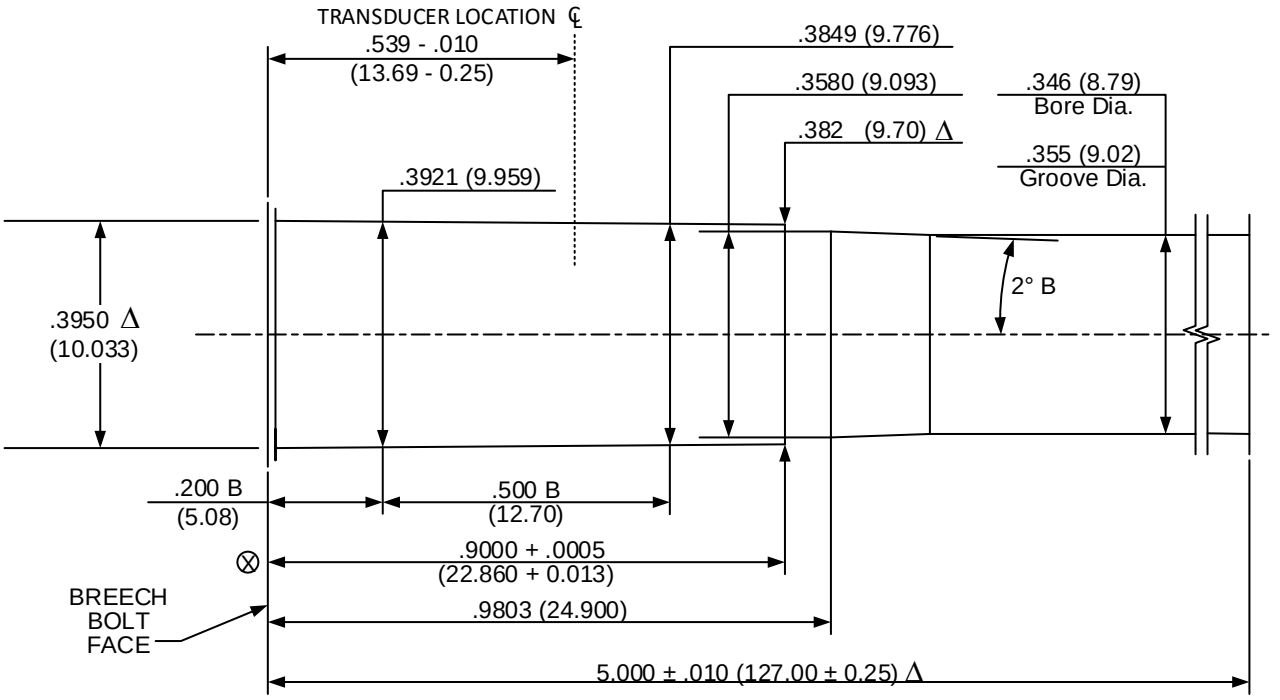

DO NOT SCALE FROM DRAWING

NUMBER OF GROOVES:	6
WIDTH OF GROOVES:	.100 + .002 (2.54 + 0.05)
TWIST RATE:	16.00 (406.4) L.H.
DIAMETER OF PISTON HOLE:	Crusher pressures not established.
TRANSDUCER DIAMETER:	.250 (6.35)

LAND AND GROOVE DIMENSIONS TO BE WITHIN TOLERANCES THROUGHOUT LENGTH OF BARREL.

UNLESS OTHERWISE NOTED, ALL DIAMETERS +.0005 (0.013) LENGTH TOLERANCE + .005 (0.13)

NOTE:

B = BASIC Δ = REFERENCE DIMENSION ⊗ = HEADSPACE DIMENSION

* DIMENSIONS ARE TO INTERSECTIONS OF LINES (XX.XX) = MILLIMETERS

ALL CALCULATIONS APPLY AT MAXIMUM MATERIAL CONDITION (MMC)

10mm Automatic V&P Test Barrel

ISSUED: 04/10/1989 REVISED: 08/09/2015

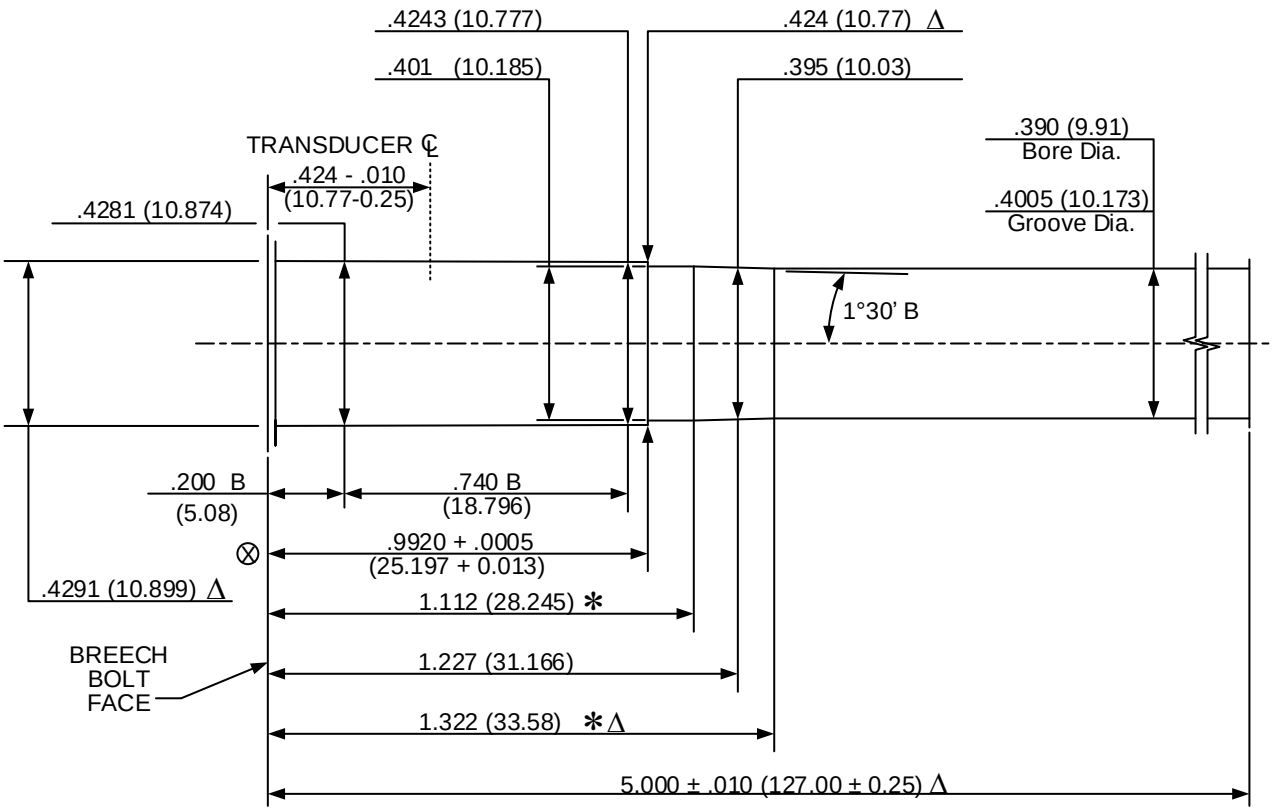

DO NOT SCALE FROM DRAWING

NUMBER OF GROOVES: 6
WIDTH OF GROOVES: .120 + .002 (3.05 + 0.05)
TWIST RATE: 16 (406.4) L.H.
DIAMETER OF PISTON HOLE: Crusher pressures not established.
TRANSDUCER DIAMETER: .250 (6.35)

LAND AND GROOVE DIMENSIONS TO BE WITHIN TOLERANCES THROUGHOUT LENGTH OF BARREL.

UNLESS OTHERWISE NOTED, ALL DIAMETERS +.0005 (0.013) LENGTH TOLERANCE + .005 (0.13)

NOTE:
B = BASIC Δ = REFERENCE DIMENSION ⊗ = HEADSPACE DIMENSION
* DIMENSIONS ARE TO INTERSECTIONS OF LINES (XX.XX) = MILLIMETERS
ALL CALCULATIONS APPLY AT MAXIMUM MATERIAL CONDITION (MMC)

221 Remington Fireball V&P Test Barrel

ISSUED: 11/06/1979 REVISED: 08/15/2015

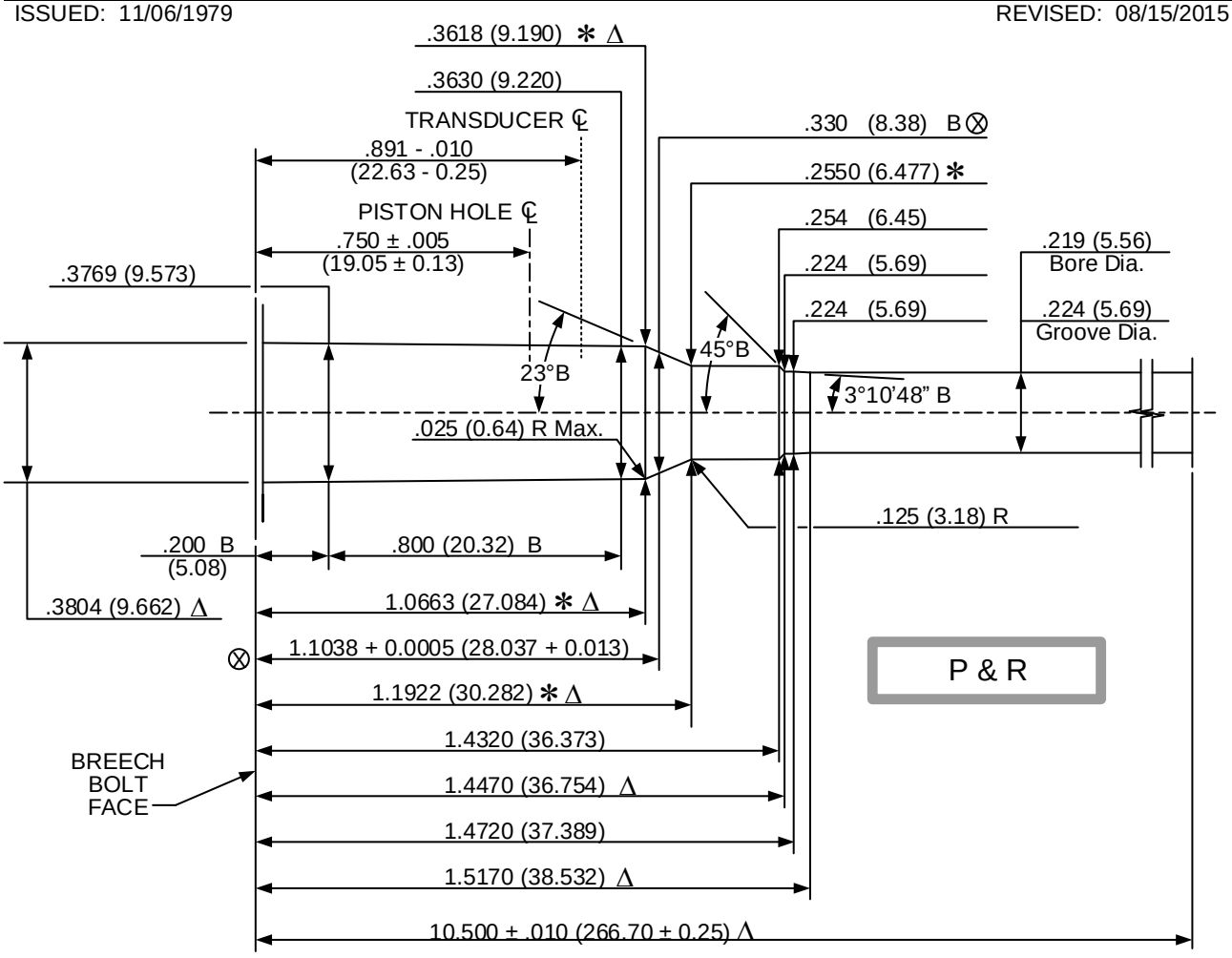

DO NOT SCALE FROM DRAWING

NUMBER OF GROOVES: 6
WIDTH OF GROOVES: .080 + .002 (2.03 + 0.05)
TWIST RATE: 12.00 (304.8) R.H.
DIAMETER OF PISTON HOLE: .206 (5.23)
TRANSDUCER DIAMETER: .250 (6.35)

LAND AND GROOVE DIMENSIONS TO BE WITHIN TOLERANCES THROUGHOUT LENGTH OF BARREL.

UNLESS OTHERWISE NOTED, ALL DIAMETERS +.0005 (0.013) LENGTH TOLERANCE + .005 (0.13)

NOTE:
B = BASIC Δ = REFERENCE DIMENSION ⊗ = HEADSPACE DIMENSION
✻ DIMENSIONS ARE TO INTERSECTIONS OF LINES (XX.XX) = MILLIMETERS
ALL CALCULATIONS APPLY AT MAXIMUM MATERIAL CONDITION (MMC)

25 Automatic V&P Test Barrel

Issued: 11/06/1979 Revised: 08/09/2015

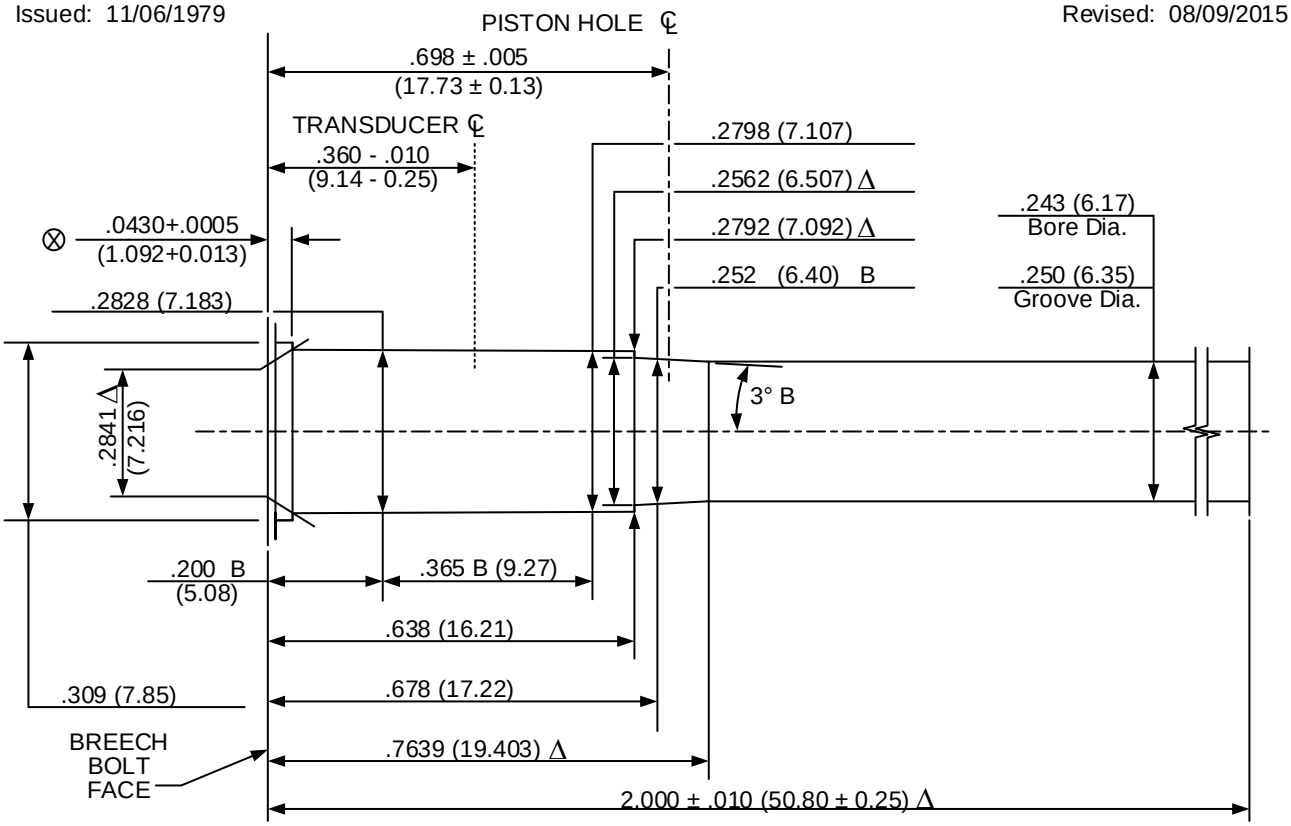

DO NOT SCALE FROM DRAWING

NUMBER OF GROOVES:	6
WIDTH OF GROOVES:	.086 + .002 (2.18 + 0.05)
TWIST RATE:	16.00 (406.4) L.H.
DIAMETER OF PISTON HOLE:	.146 (3.71)
TRANSDUCER DIAMETER:	.194 (4.93)

LAND AND GROOVE DIMENSIONS TO BE WITHIN TOLERANCES THROUGHOUT LENGTH OF BARREL.

UNLESS OTHERWISE NOTED, ALL DIAMETERS +.0005 (0.013) LENGTH TOLERANCE + .005 (0.13)

NOTE:

B = BASIC Δ = REFERENCE DIMENSION ⊗ = HEADSPACE DIMENSION
∗ DIMENSIONS ARE TO INTERSECTIONS OF LINES (XX.XX) = MILLIMETERS
ALL CALCULATIONS APPLY AT MAXIMUM MATERIAL CONDITION (MMC)

25 North American Arms V&P Test Barrel

Issued: 06/22/2005 Revised: 08/09/2015

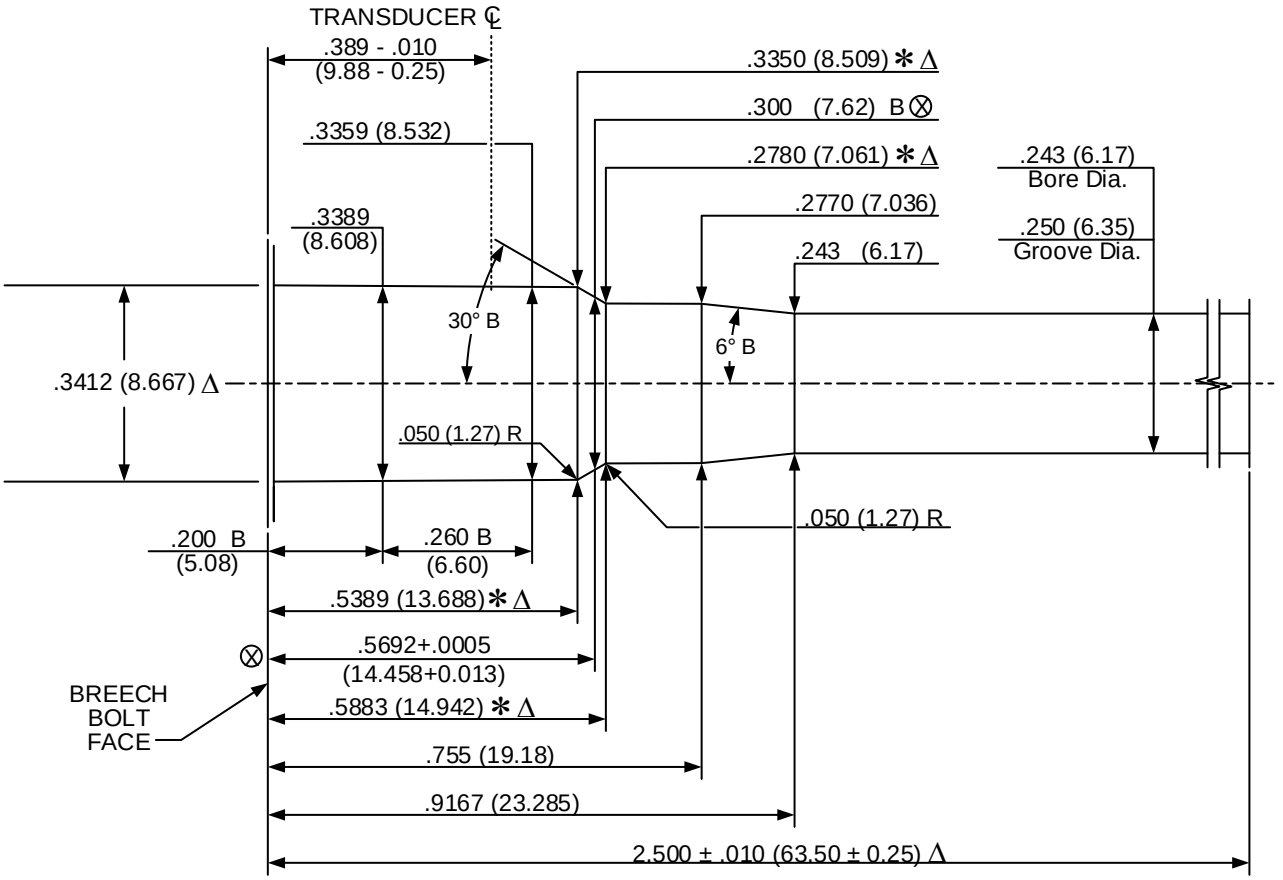

DO NOT SCALE FROM DRAWING

NUMBER OF GROOVES:	6
WIDTH OF GROOVES:	.086 + .002 (2.18 + 0.05)
TWIST RATE:	16.00 (406.4) R.H.
DIAMETER OF PISTON HOLE:	Crusher pressures not established
TRANSDUCER DIAMETER:	.194 (4.93)

LAND AND GROOVE DIMENSIONS TO BE WITHIN TOLERANCES THROUGHOUT LENGTH OF BARREL.

UNLESS OTHERWISE NOTED, ALL DIAMETERS +.0005 (0.013) LENGTH TOLERANCE + .005 (0.13)

NOTE:

B = BASIC Δ = REFERENCE DIMENSION ⊗ = HEADSPACE DIMENSION
✻ DIMENSIONS ARE TO INTERSECTIONS OF LINES (XX.XX) = MILLIMETERS
ALL CALCULATIONS APPLY AT MAXIMUM MATERIAL CONDITION (MMC)

30 Luger (7.65mm) V&P Test Barrel

Issued: 11/06/1979 Revised: 08/09/2015

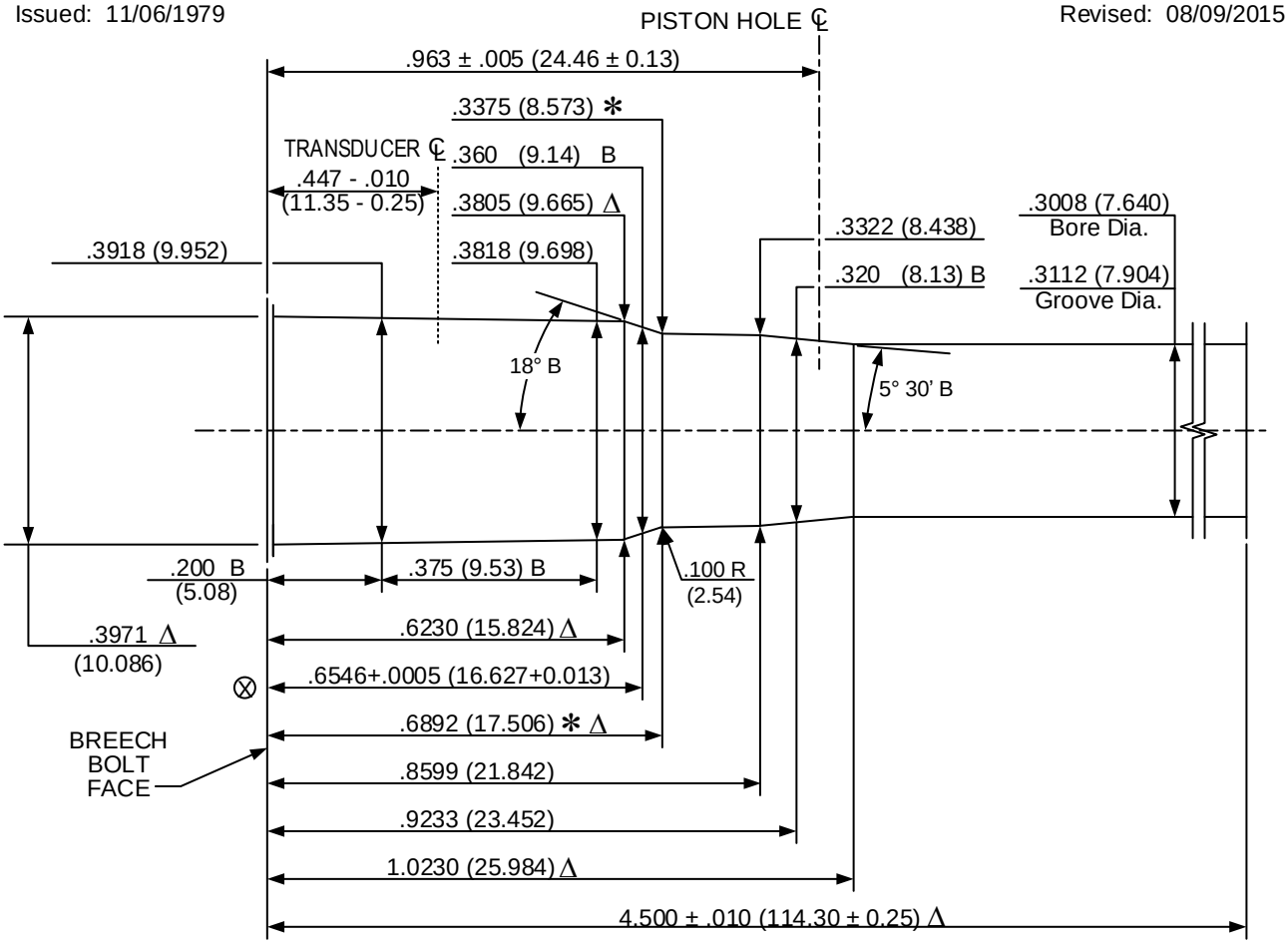

DO NOT SCALE FROM DRAWING

NUMBER OF GROOVES: 4
WIDTH OF GROOVES: .120 + .002 (3.05 + 0.05)
TWIST RATE: 11 (279.4) R.H.
DIAMETER OF PISTON HOLE: .206 (5.23)
TRANSDUCER DIAMETER: .250 (6.35)

LAND AND GROOVE DIMENSIONS TO BE WITHIN TOLERANCES THROUGHOUT LENGTH OF BARREL.

UNLESS OTHERWISE NOTED, ALL DIAMETERS +.0005 (0.013) LENGTH TOLERANCE + .005 (0.13)

NOTE:
B = BASIC Δ = REFERENCE DIMENSION ⊗ = HEADSPACE DIMENSION
✻ DIMENSIONS ARE TO INTERSECTIONS OF LINES (XX.XX) = MILLIMETERS
ALL CALCULATIONS APPLY AT MAXIMUM MATERIAL CONDITION (MMC)

32 Automatic V&P Test Barrel

Issued: 11/06/1979 Revised: 08/09/2015

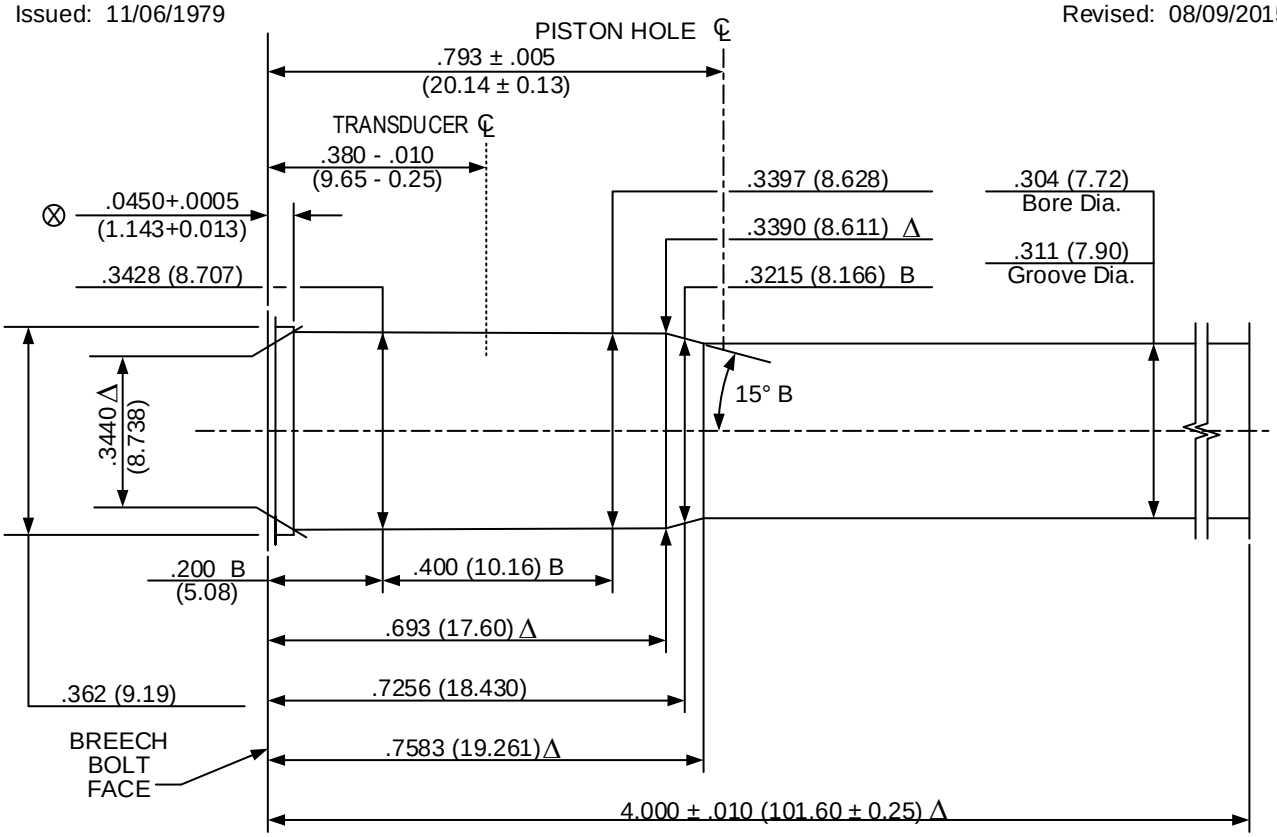

DO NOT SCALE FROM DRAWING

NUMBER OF GROOVES:	6
WIDTH OF GROOVES:	.106 + .002 (2.69 + 0.05)
TWIST RATE:	16 (406.4) L.H.
DIAMETER OF PISTON HOLE:	.206 (5.23)
TRANSDUCER DIAMETER:	.194 (4.93)

LAND AND GROOVE DIMENSIONS TO BE WITHIN TOLERANCES THROUGHOUT LENGTH OF BARREL.

UNLESS OTHERWISE NOTED, ALL DIAMETERS +.0005 (0.013) LENGTH TOLERANCE + .005 (0.13)

NOTE:

B = BASIC Δ = REFERENCE DIMENSION ⊗ = HEADSPACE DIMENSION
* DIMENSIONS ARE TO INTERSECTIONS OF LINES (XX.XX) = MILLIMETERS
ALL CALCULATIONS APPLY AT MAXIMUM MATERIAL CONDITION (MMC)

32 H&R Magnum V&P Test Barrel

Issued: 09/17/1984 Revised: 08/09/2015

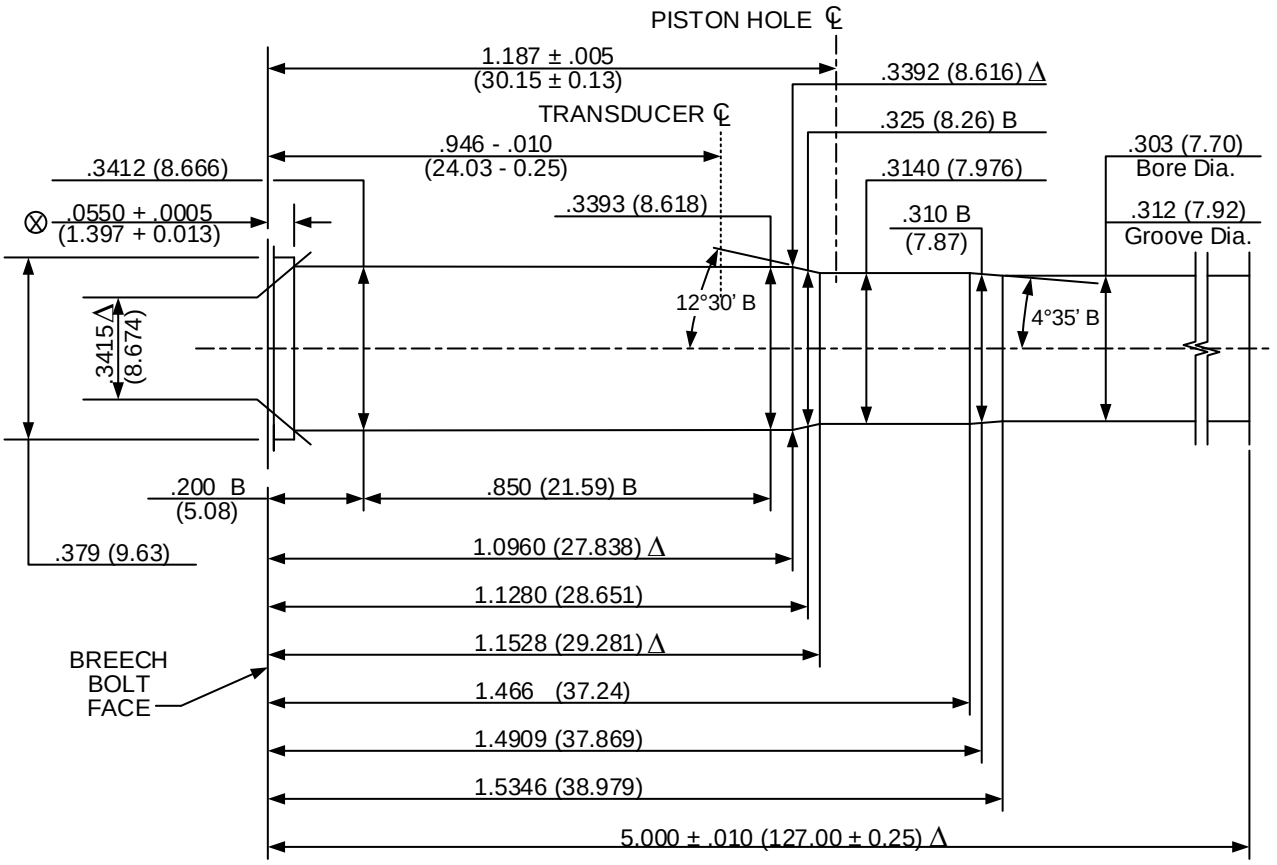

DO NOT SCALE FROM DRAWING

NUMBER OF GROOVES:	5
WIDTH OF GROOVES:	.095 + .002 (2.41 + 0.05)
TWIST RATE:	16 (406.40) L.H.
DIAMETER OF PISTON HOLE:	.206 (5.23)
TRANSDUCER DIAMETER:	.194 (4.93)

LAND AND GROOVE DIMENSIONS TO BE WITHIN TOLERANCES THROUGHOUT LENGTH OF BARREL.

UNLESS OTHERWISE NOTED, ALL DIAMETERS +.0005 (0.013) LENGTH TOLERANCE + .005 (0.13)

NOTE:

B = BASIC Δ = REFERENCE DIMENSION ⊗ = HEADSPACE DIMENSION
∗ DIMENSIONS ARE TO INTERSECTIONS OF LINES (XX.XX) = MILLIMETERS
ALL CALCULATIONS APPLY AT MAXIMUM MATERIAL CONDITION (MMC)

32 North American Arms V&P Test Barrel

Issued: 08/02/2003 Revised: 08/10/2015

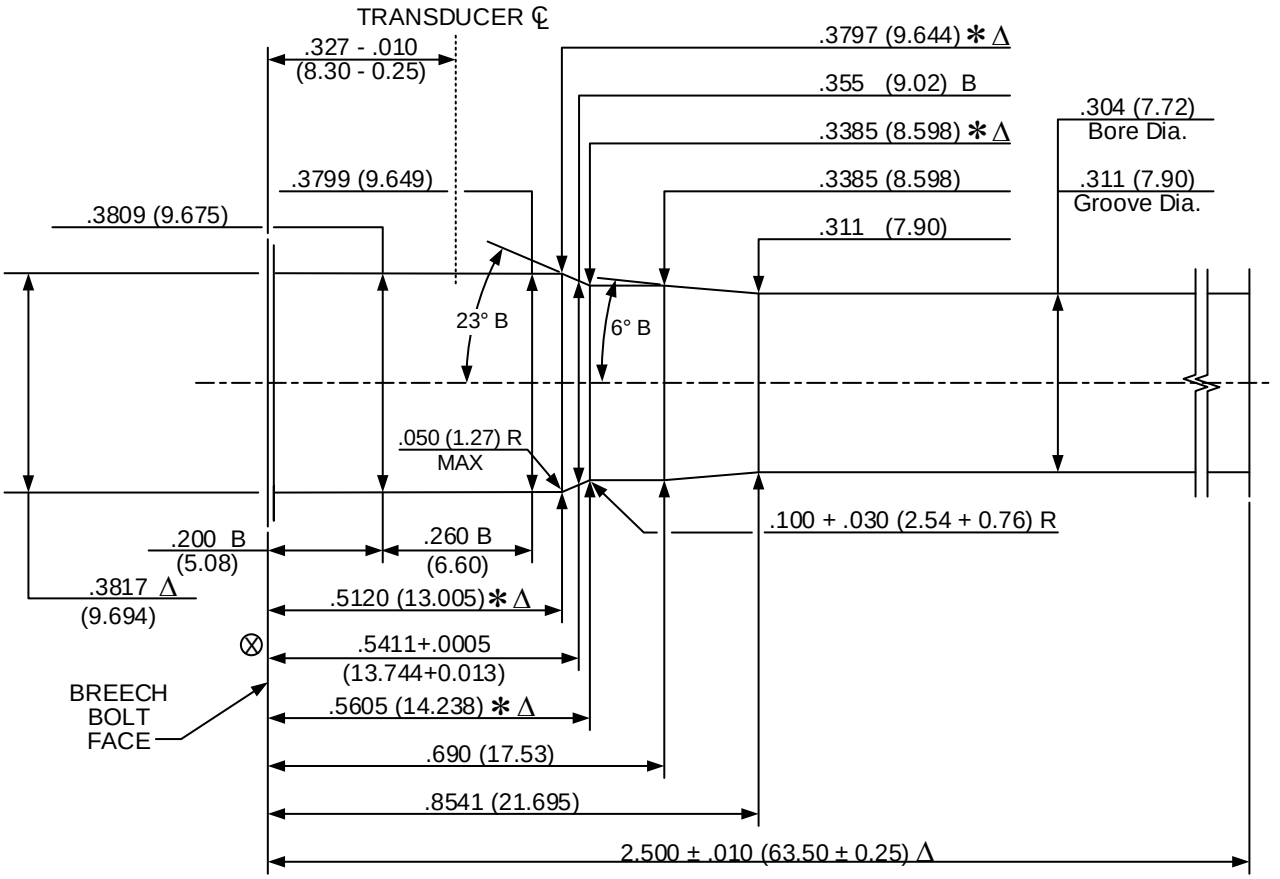

DO NOT SCALE FROM DRAWING

NUMBER OF GROOVES: 6
WIDTH OF GROOVES: .106 + .002 (2.69 + 0.05)
TWIST RATE: 16 (406.4) R.H.
DIAMETER OF PISTON HOLE: Crusher pressures not established
TRANSDUCER DIAMETER: .250 (6.35)

LAND AND GROOVE DIMENSIONS TO BE WITHIN TOLERANCES THROUGHOUT LENGTH OF BARREL.

UNLESS OTHERWISE NOTED, ALL DIAMETERS +.0005 (0.013) LENGTH TOLERANCE + .005 (0.13)

NOTE:
B = BASIC Δ = REFERENCE DIMENSION ⊗ = HEADSPACE DIMENSION
✻ DIMENSIONS ARE TO INTERSECTIONS OF LINES (XX.XX) = MILLIMETERS
ALL CALCULATIONS APPLY AT MAXIMUM MATERIAL CONDITION (MMC)

32 Short Colt V&P Test Barrel

Issued: 11/06/1979 — VENTED & SOLID — Revised: 08/10/2015

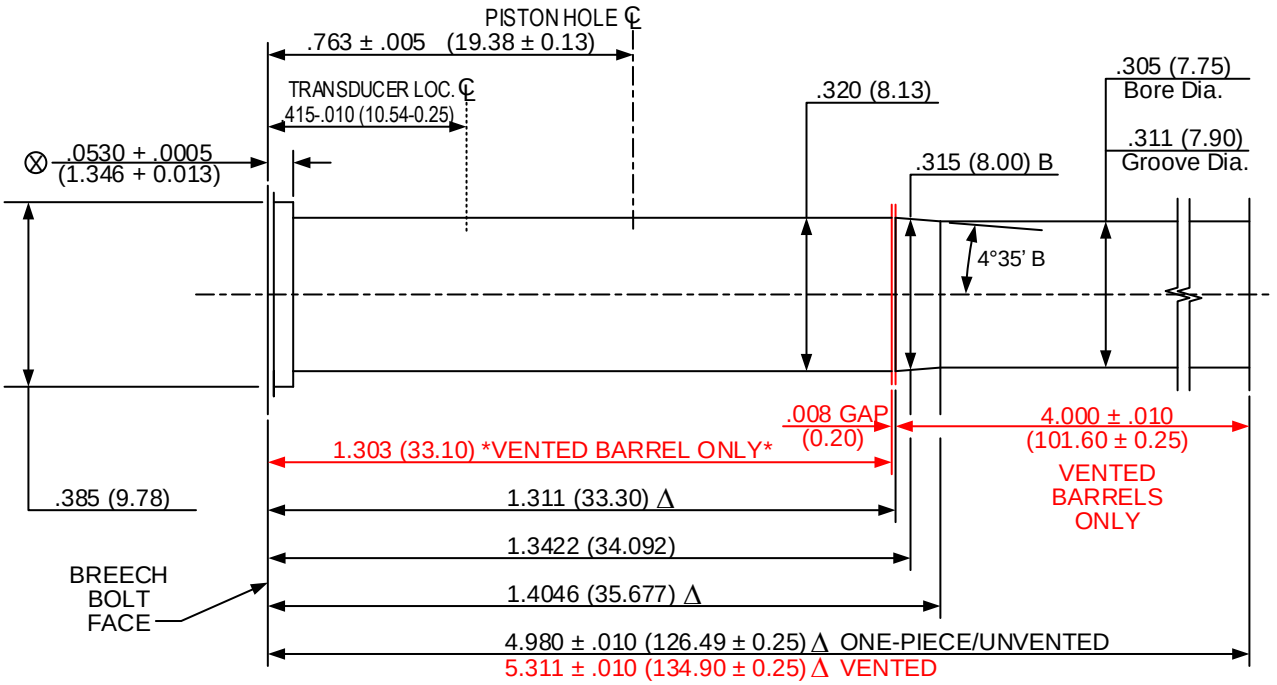

DO NOT SCALE FROM DRAWING

NUMBER OF GROOVES:	6
WIDTH OF GROOVES:	.106 + .002 (2.69 + 0.05)
TWIST RATE:	16 (406.4) L.H.
DIAMETER OF PISTON HOLE:	.206 (5.23)
TRANSDUCER DIAMETER:	.194 (4.93)

LAND AND GROOVE DIMENSIONS TO BE WITHIN TOLERANCES THROUGHOUT LENGTH OF BARREL.

UNLESS OTHERWISE NOTED, ALL DIAMETERS +.0005 (0.013) LENGTH TOLERANCE + .005 (0.13)

NOTE:

B = BASIC Δ = REFERENCE DIMENSION ⊗ = HEADSPACE DIMENSION
∗ DIMENSIONS ARE TO INTERSECTIONS OF LINES (XX.XX) = MILLIMETERS
ALL CALCULATIONS APPLY AT MAXIMUM MATERIAL CONDITION (MMC)

32 Smith & Wesson V&P Test Barrel

Issued: 11/06/1979

VENTED & SOLID

Revised: 08/16/2015

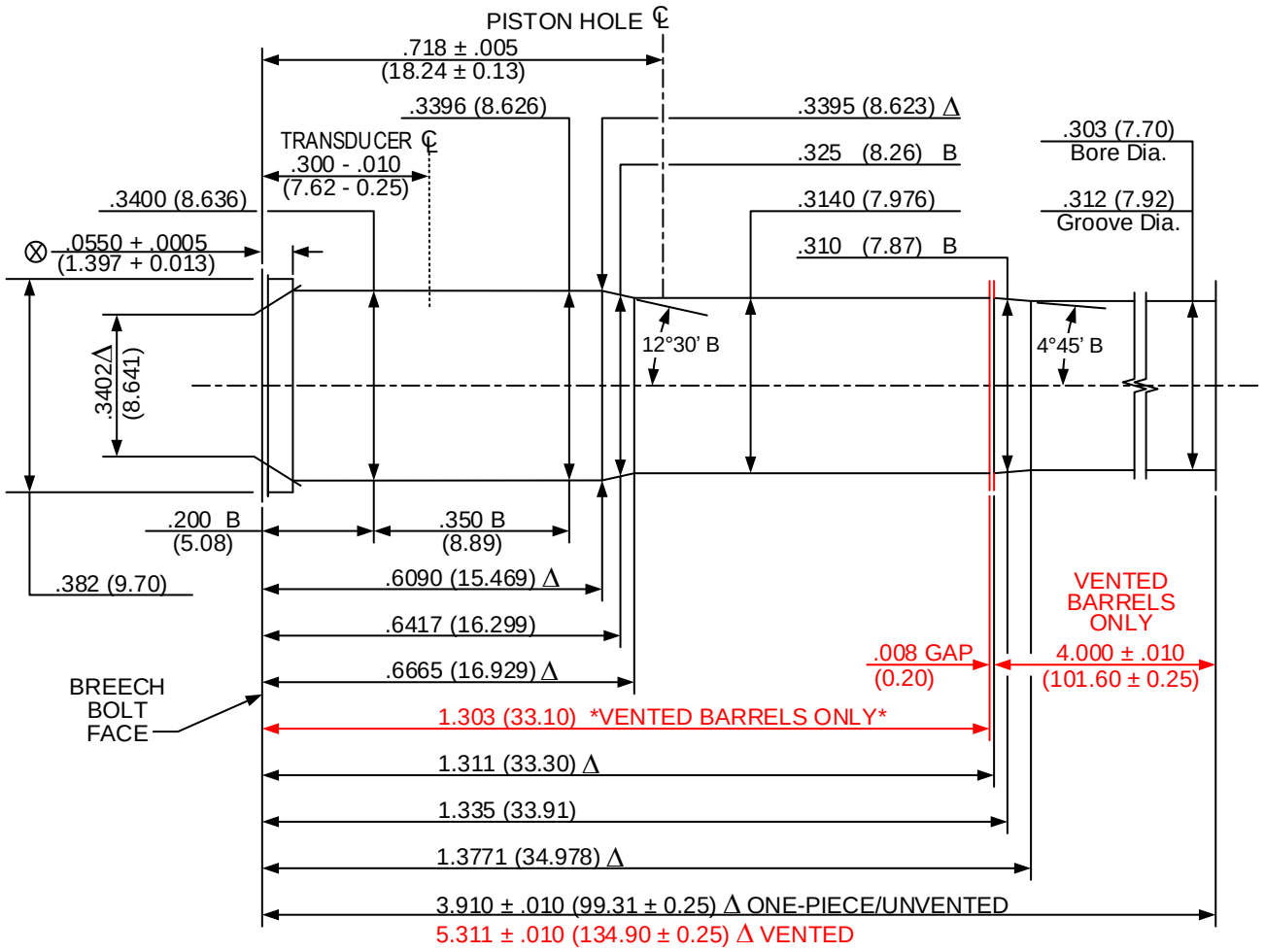

DO NOT SCALE FROM DRAWING

NUMBER OF GROOVES: 5
WIDTH OF GROOVES: .095 + .002 (2.41 + 0.05)
TWIST RATE: 18.75 (476.3) R.H.
DIAMETER OF PISTON HOLE: .206 (5.23)
TRANSDUCER DIAMETER: .194 (4.93)

LAND AND GROOVE DIMENSIONS TO BE WITHIN TOLERANCES THROUGHOUT LENGTH OF BARREL.

UNLESS OTHERWISE NOTED, ALL DIAMETERS +.0005 (0.013) LENGTH TOLERANCE + .005 (0.13)

NOTE:
B = BASIC Δ = REFERENCE DIMENSION ⊗ = HEADSPACE DIMENSION
* DIMENSIONS ARE TO INTERSECTIONS OF LINES (XX.XX) = MILLIMETERS
ALL CALCULATIONS APPLY AT MAXIMUM MATERIAL CONDITION (MMC)

32 Smith & Wesson Long V&P Test Barrel

Issued: 11/06/1979 — VENTED & SOLID — Revised: 08/16/2015

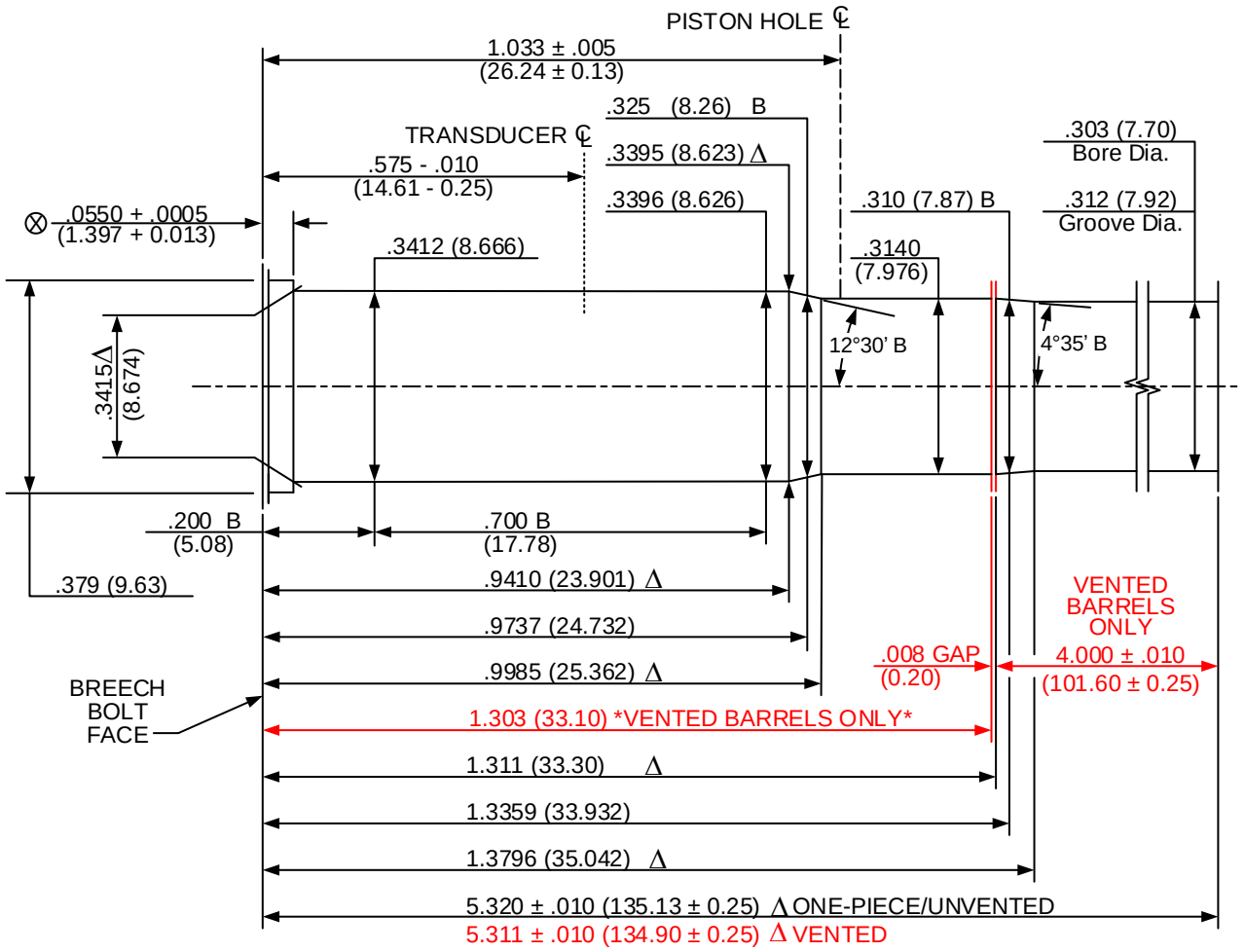

DO NOT SCALE FROM DRAWING

NUMBER OF GROOVES: 5
WIDTH OF GROOVES: .095 + .002 (2.41 + 0.05)
TWIST RATE: 18.75 (476.3) L.H.
DIAMETER OF PISTON HOLE: .206 (5.23)
TRANSDUCER DIAMETER: .194 (4.93)

LAND AND GROOVE DIMENSIONS TO BE WITHIN TOLERANCES THROUGHOUT LENGTH OF BARREL.

UNLESS OTHERWISE NOTED, ALL DIAMETERS +.0005 (0.013) LENGTH TOLERANCE + .005 (0.13)

NOTE:
B = BASIC Δ = REFERENCE DIMENSION ⊗ = HEADSPACE DIMENSION
* DIMENSIONS ARE TO INTERSECTIONS OF LINES (XX.XX) = MILLIMETERS
ALL CALCULATIONS APPLY AT MAXIMUM MATERIAL CONDITION (MMC)

327 Federal Magnum V&P Test Barrel

Issued: 01/31/2008

VENTED & SOLID

Revised: 08/11/2015

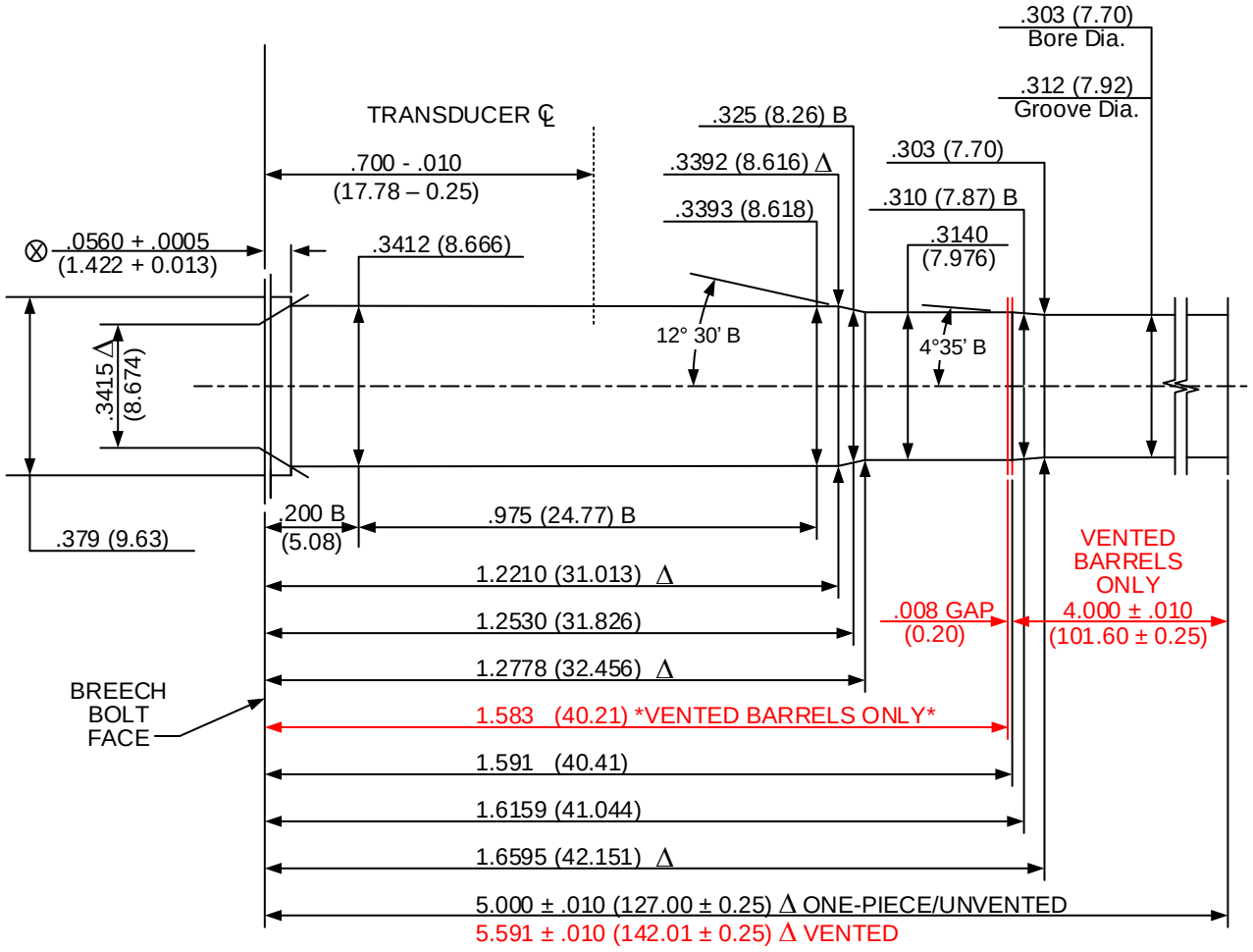

DO NOT SCALE FROM DRAWING

NUMBER OF GROOVES: 5
WIDTH OF GROOVES: .095 + .002 (2.41 + 0.05)
TWIST RATE: 16.00 (406.4) R.H.
DIAMETER OF PISTON HOLE: Crusher pressures not established.
TRANSDUCER DIAMETER: .194 (4.93)

LAND AND GROOVE DIMENSIONS TO BE WITHIN TOLERANCES THROUGHOUT LENGTH OF BARREL.

UNLESS OTHERWISE NOTED, ALL DIAMETERS +.0005 (0.013) LENGTH TOLERANCE + .005 (0.13)

NOTE:
B = BASIC Δ = REFERENCE DIMENSION ⊗ = HEADSPACE DIMENSION
∗ DIMENSIONS ARE TO INTERSECTIONS OF LINES (XX.XX) = MILLIMETERS
ALL CALCULATIONS APPLY AT MAXIMUM MATERIAL CONDITION (MMC)

356 TSW V&P Test Barrel

Issued: 01/12/1994 Revised: 08/15/2015

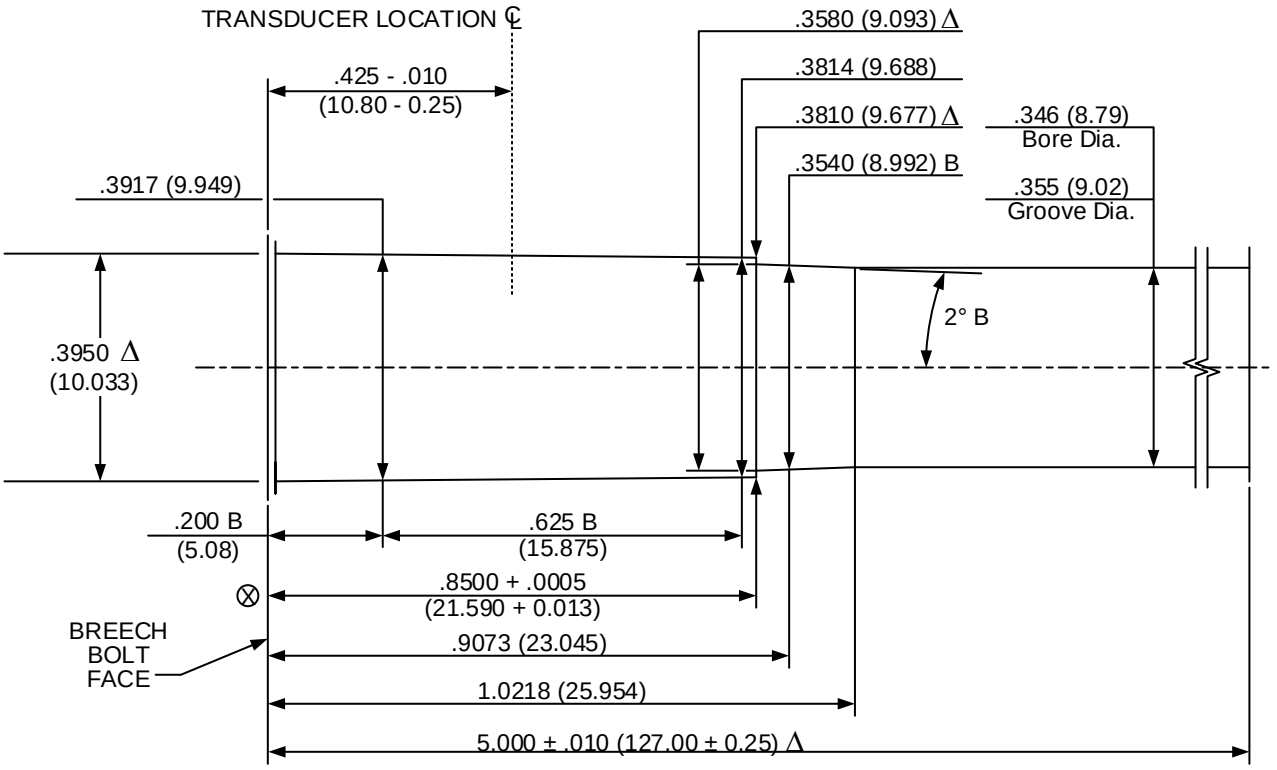

DO NOT SCALE FROM DRAWING

NUMBER OF GROOVES: 6
WIDTH OF GROOVES: .100 + .002 (2.54 + 0.05)
TWIST RATE: 10.00 (254.0) R.H.
DIAMETER OF PISTON HOLE: Crusher pressures not established.
TRANSDUCER DIAMETER: .250 (6.35)

LAND AND GROOVE DIMENSIONS TO BE WITHIN TOLERANCES THROUGHOUT LENGTH OF BARREL.

UNLESS OTHERWISE NOTED, ALL DIAMETERS +.0005 (0.013) LENGTH TOLERANCE + .005 (0.13)

NOTE:
B = BASIC Δ = REFERENCE DIMENSION ⊗ = HEADSPACE DIMENSION
✻ DIMENSIONS ARE TO INTERSECTIONS OF LINES (XX.XX) = MILLIMETERS
ALL CALCULATIONS APPLY AT MAXIMUM MATERIAL CONDITION (MMC)

357 Magnum V&P Test Barrel

Issued: 11/06/1979 — VENTED & SOLID — Revised: 08/15/2015

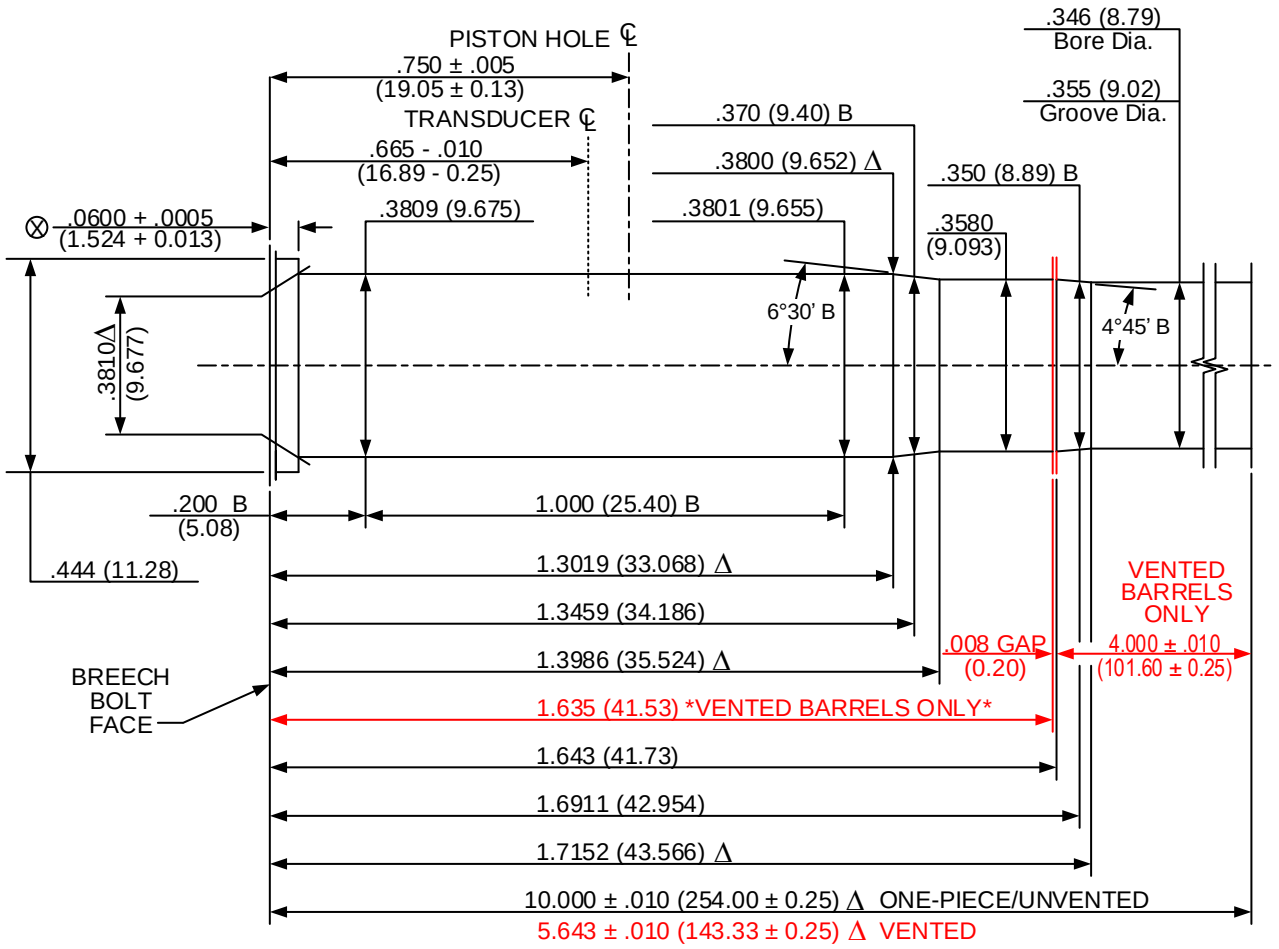

DO NOT SCALE FROM DRAWING

NUMBER OF GROOVES:	6
WIDTH OF GROOVES:	.1058 + .0020 (2.687 + 0.051)
TWIST RATE:	18.75 (476.3) R.H.
DIAMETER OF PISTON HOLE:	.206 (5.23)
TRANSDUCER DIAMETER:	.250 (6.35)

LAND AND GROOVE DIMENSIONS TO BE WITHIN TOLERANCES THROUGHOUT LENGTH OF BARREL.

UNLESS OTHERWISE NOTED, ALL DIAMETERS +.0005 (0.013) LENGTH TOLERANCE + .005 (0.13)

NOTE:

B = BASIC Δ = REFERENCE DIMENSION ⊗ = HEADSPACE DIMENSION
∗ DIMENSIONS ARE TO INTERSECTIONS OF LINES (XX.XX) = MILLIMETERS
ALL CALCULATIONS APPLY AT MAXIMUM MATERIAL CONDITION (MMC)

357 Sig V&P Test Barrel

Issued: 07/19/1994 Revised: 08/15/2015

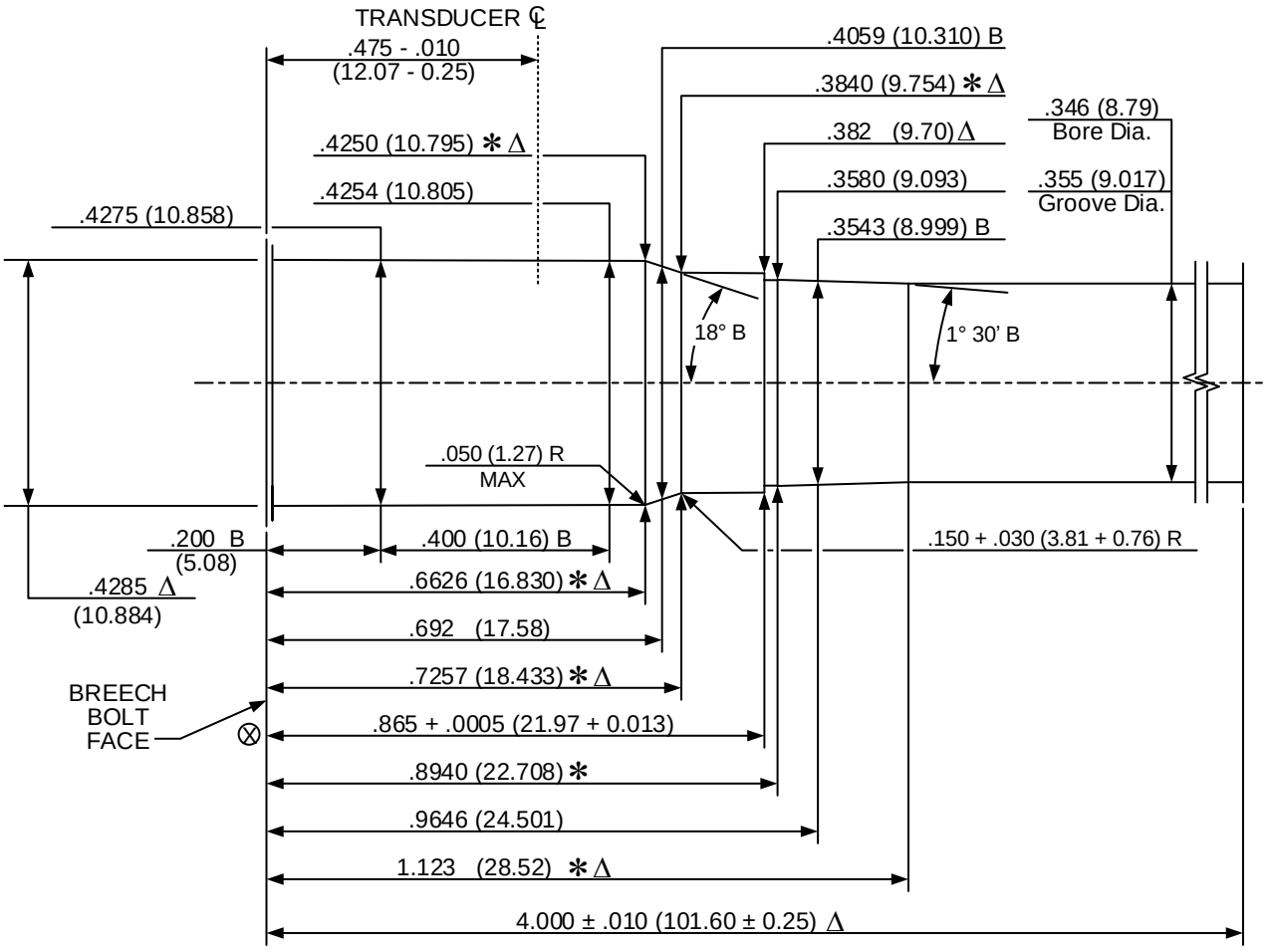

DO NOT SCALE FROM DRAWING

NUMBER OF GROOVES: 6
WIDTH OF GROOVES: .1058 + .002 (2.687 + 0.05)
TWIST RATE: 16 (406.4) R.H.
DIAMETER OF PISTON HOLE: Crusher pressures not established
TRANSDUCER DIAMETER: .250 (6.35)

LAND AND GROOVE DIMENSIONS TO BE WITHIN TOLERANCES THROUGHOUT LENGTH OF BARREL.

UNLESS OTHERWISE NOTED, ALL DIAMETERS +.0005 (0.013) LENGTH TOLERANCE + .005 (0.13)

NOTE:
B = BASIC Δ = REFERENCE DIMENSION ⊗ = HEADSPACE DIMENSION
✻ DIMENSIONS ARE TO INTERSECTIONS OF LINES (XX.XX) = MILLIMETERS
ALL CALCULATIONS APPLY AT MAXIMUM MATERIAL CONDITION (MMC)

38 Automatic / 38 Super Automatic +P V&P Test Barrel

Issued: 11/06/1979 Revised: 08/10/2015

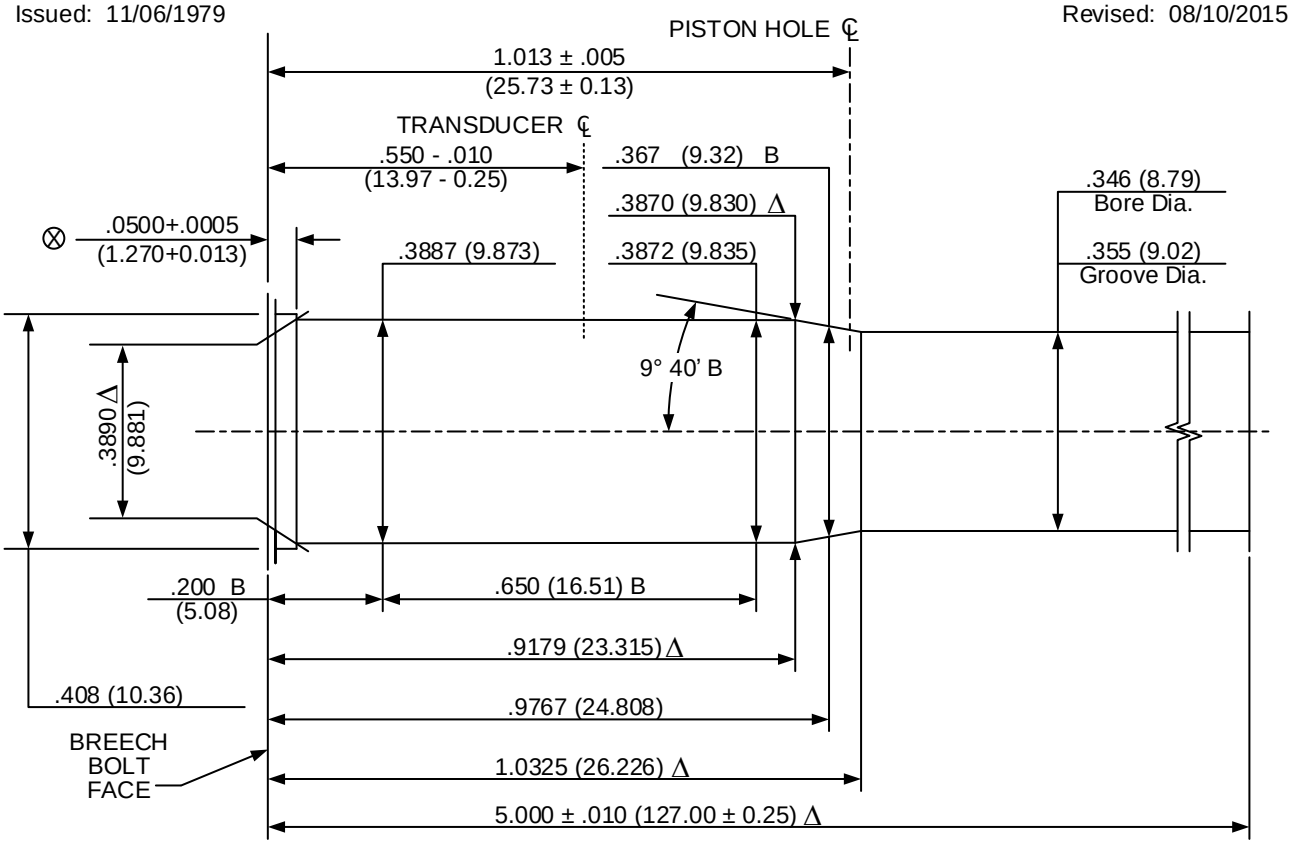

DO NOT SCALE FROM DRAWING

NUMBER OF GROOVES: 6
WIDTH OF GROOVES: .121 + .002 (3.07 + 0.05)
TWIST RATE: 16 (406.4) L.H.
DIAMETER OF PISTON HOLE: .206 (5.23)
TRANSDUCER DIAMETER: .250 (6.35)

LAND AND GROOVE DIMENSIONS TO BE WITHIN TOLERANCES THROUGHOUT LENGTH OF BARREL.

UNLESS OTHERWISE NOTED, ALL DIAMETERS +.0005 (0.013) LENGTH TOLERANCE + .005 (0.13)

NOTE:
B = BASIC Δ = REFERENCE DIMENSION ⊗ = HEADSPACE DIMENSION
* DIMENSIONS ARE TO INTERSECTIONS OF LINES (XX.XX) = MILLIMETERS
ALL CALCULATIONS APPLY AT MAXIMUM MATERIAL CONDITION (MMC)

38 Smith & Wesson V&P Test Barrel

Issued: 11/06/1979 — VENTED & SOLID — Revised: 08/11/2015

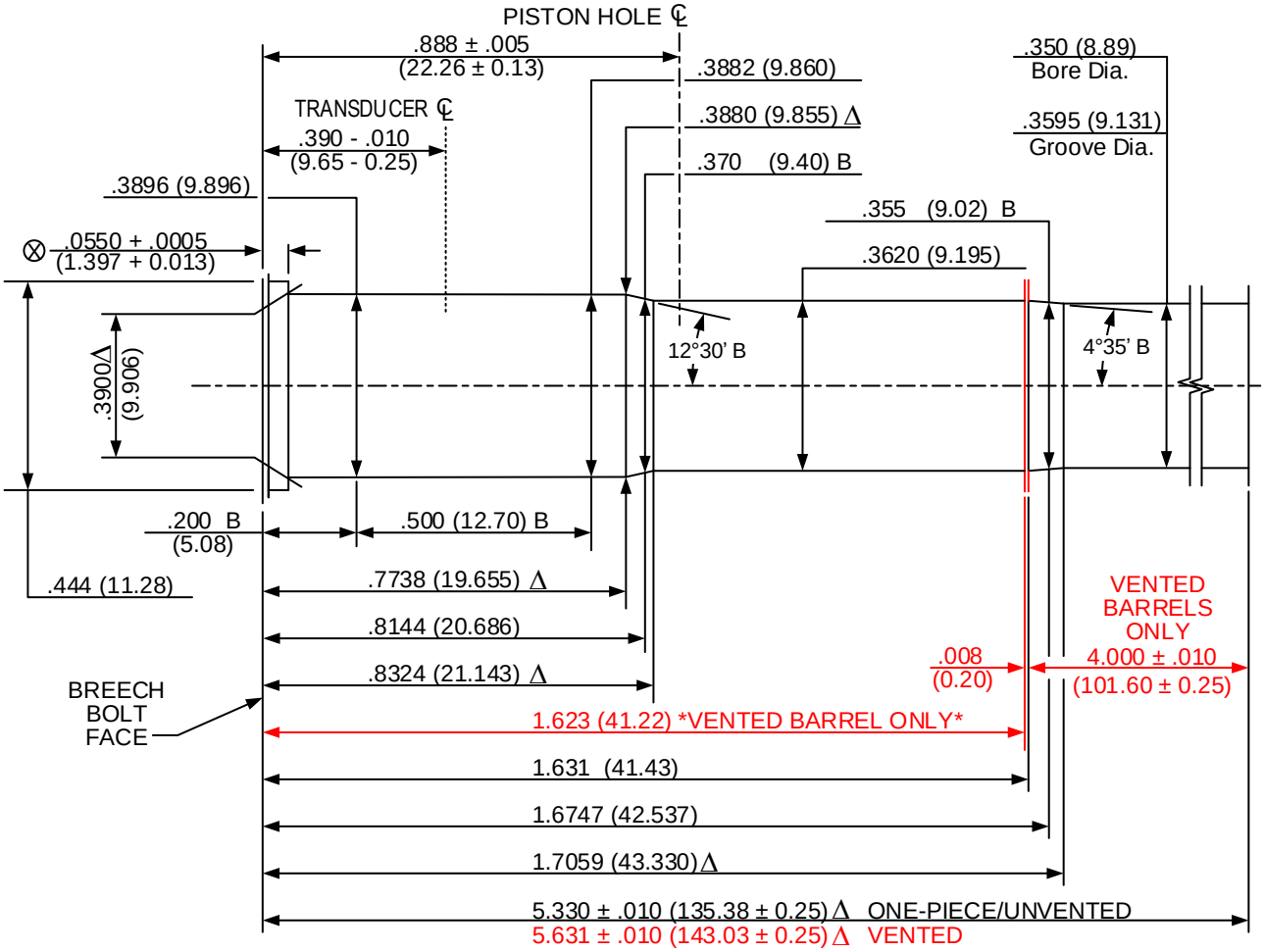

DO NOT SCALE FROM DRAWING

NUMBER OF GROOVES:	5
WIDTH OF GROOVES:	.114 + .002 (2.90 + 0.05)
TWIST RATE:	18.75 (476.3) L.H.
DIAMETER OF PISTON HOLE:	.206 (5.23)
TRANSDUCER DIAMETER:	.250 (6.35)

LAND AND GROOVE DIMENSIONS TO BE WITHIN TOLERANCES THROUGHOUT LENGTH OF BARREL.

UNLESS OTHERWISE NOTED, ALL DIAMETERS +.0005 (0.013) LENGTH TOLERANCE + .005 (0.13)

NOTE:

B = BASIC Δ = REFERENCE DIMENSION ⊗ = HEADSPACE DIMENSION
∗ DIMENSIONS ARE TO INTERSECTIONS OF LINES (XX.XX) = MILLIMETERS
ALL CALCULATIONS APPLY AT MAXIMUM MATERIAL CONDITION (MMC)

38 Special / 38 Special +P / 38 Special Match V&P Test Barrel

Issued: 11/06/1979 — VENTED & SOLID — Revised: 08/10/2015

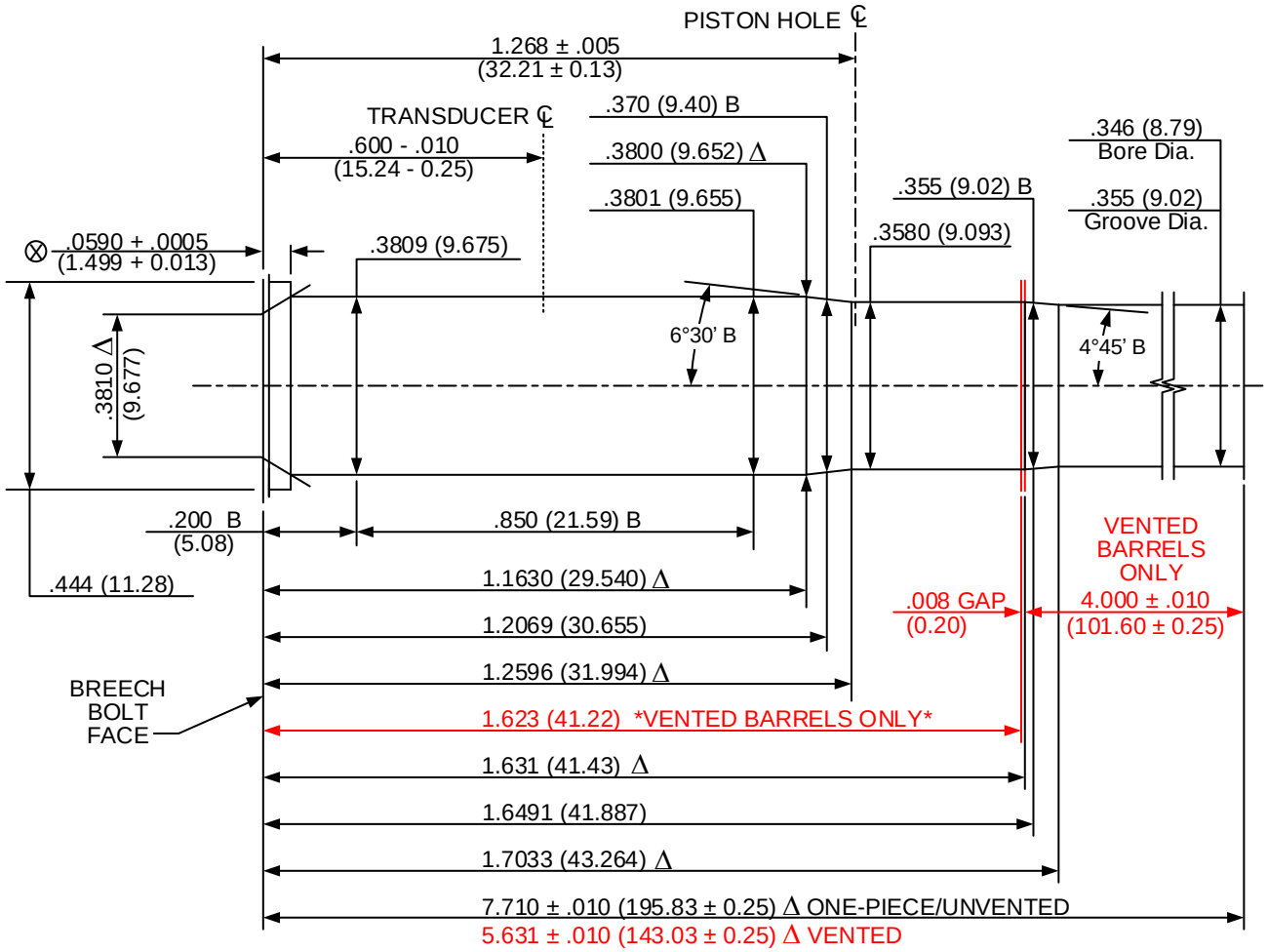

DO NOT SCALE FROM DRAWING

NUMBER OF GROOVES: 6
WIDTH OF GROOVES: .105 + .002 (2.67 + 0.05)
TWIST RATE: 18.75 (476.3) R.H.
DIAMETER OF PISTON HOLE: .206 (5.23)
TRANSDUCER DIAMETER: .250 (6.35)

LAND AND GROOVE DIMENSIONS TO BE WITHIN TOLERANCES THROUGHOUT LENGTH OF BARREL.

UNLESS OTHERWISE NOTED, ALL DIAMETERS +.0005 (0.013) LENGTH TOLERANCE + .005 (0.13)

NOTE:
B = BASIC Δ = REFERENCE DIMENSION ⊗ = HEADSPACE DIMENSION
* DIMENSIONS ARE TO INTERSECTIONS OF LINES (XX.XX) = MILLIMETERS
ALL CALCULATIONS APPLY AT MAXIMUM MATERIAL CONDITION (MMC)

380 Automatic V&P Test Barrel

Issued: 11/06/1979 Revised: 08/15/2015

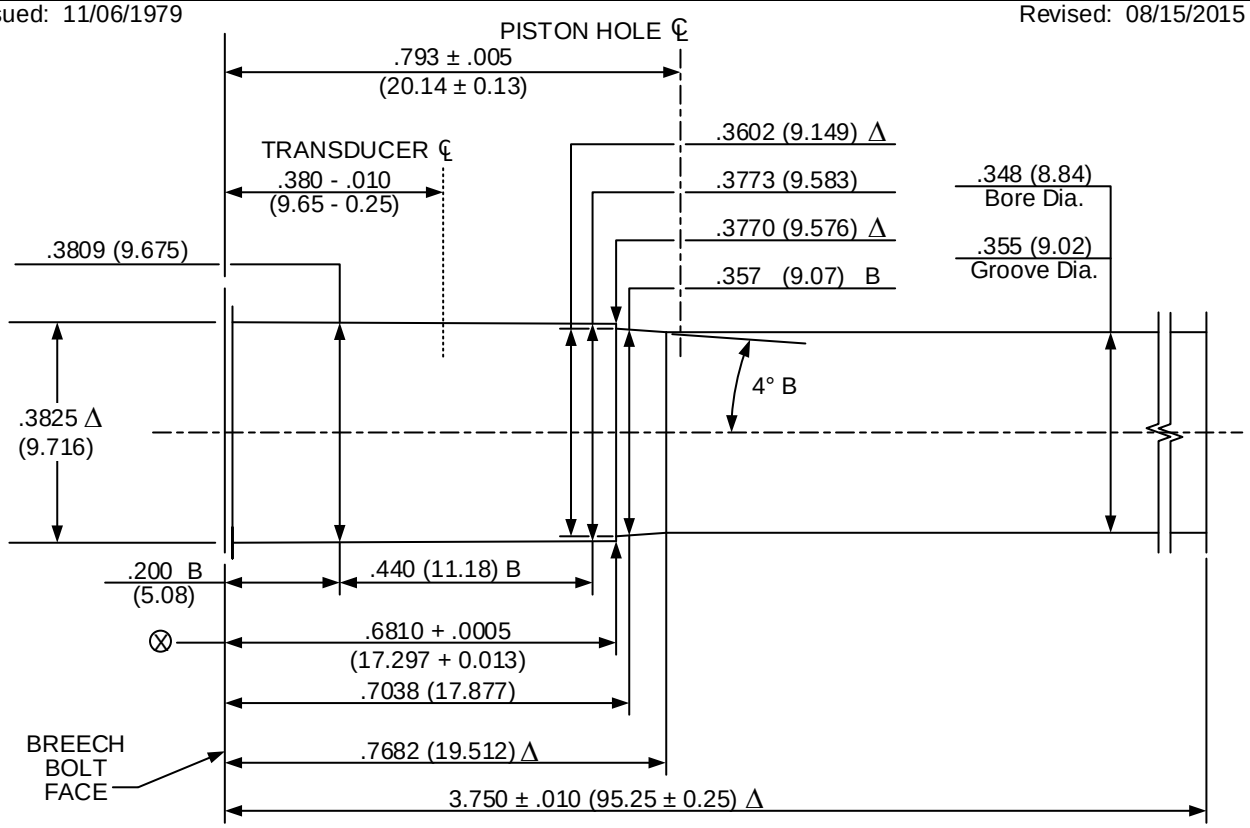

DO NOT SCALE FROM DRAWING

NUMBER OF GROOVES:	6
WIDTH OF GROOVES:	.121 + .002 (3.07 + 0.05)
TWIST RATE:	16 (406.4) L.H.
DIAMETER OF PISTON HOLE:	.206 (5.23)
TRANSDUCER DIAMETER:	.250 (6.35)

LAND AND GROOVE DIMENSIONS TO BE WITHIN TOLERANCES THROUGHOUT LENGTH OF BARREL.

UNLESS OTHERWISE NOTED, ALL DIAMETERS +.0005 (0.013) LENGTH TOLERANCE + .005 (0.13)

NOTE:

B = BASIC Δ = REFERENCE DIMENSION ⊗ = HEADSPACE DIMENSION
* DIMENSIONS ARE TO INTERSECTIONS OF LINES (XX.XX) = MILLIMETERS
ALL CALCULATIONS APPLY AT MAXIMUM MATERIAL CONDITION (MMC)

40 Smith & Wesson V&P Test Barrel

Issued: 02/01/1990 Revised: 08/10/2015

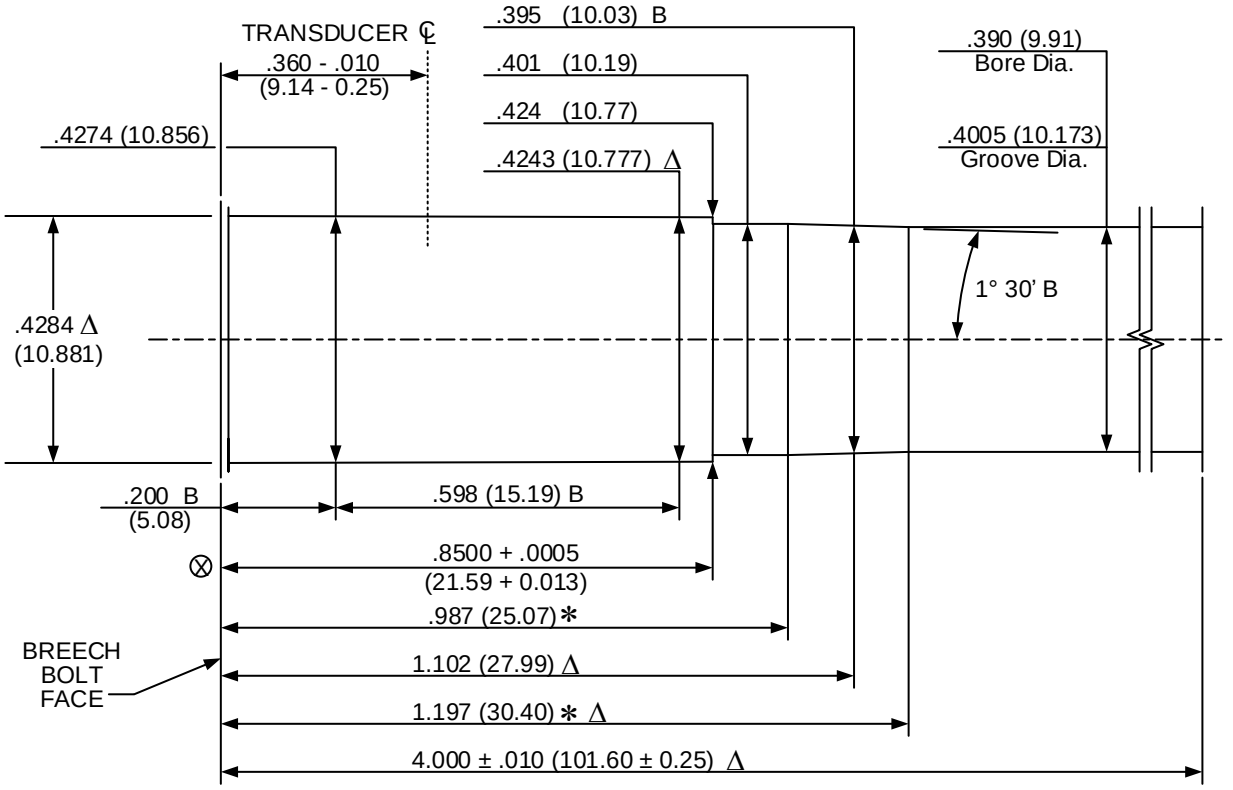

DO NOT SCALE FROM DRAWING

NUMBER OF GROOVES: 6
WIDTH OF GROOVES: .120 + .002 (3.05 + 0.05)
TWIST RATE: 16 (406.4) R.H.
DIAMETER OF PISTON HOLE: Crusher pressure not established
TRANSDUCER DIAMETER: .250 (6.35)

LAND AND GROOVE DIMENSIONS TO BE WITHIN TOLERANCES THROUGHOUT LENGTH OF BARREL.

UNLESS OTHERWISE NOTED, ALL DIAMETERS +.0005 (0.013) LENGTH TOLERANCE + .005 (0.13)

NOTE:
B = BASIC Δ = REFERENCE DIMENSION ⊗ = HEADSPACE DIMENSION
* DIMENSIONS ARE TO INTERSECTIONS OF LINES (XX.XX) = MILLIMETERS
ALL CALCULATIONS APPLY AT MAXIMUM MATERIAL CONDITION (MMC)

400 Cor-Bon V&P Test Barrel

Issued: 02/08/2006 Revised: 08/15/2015

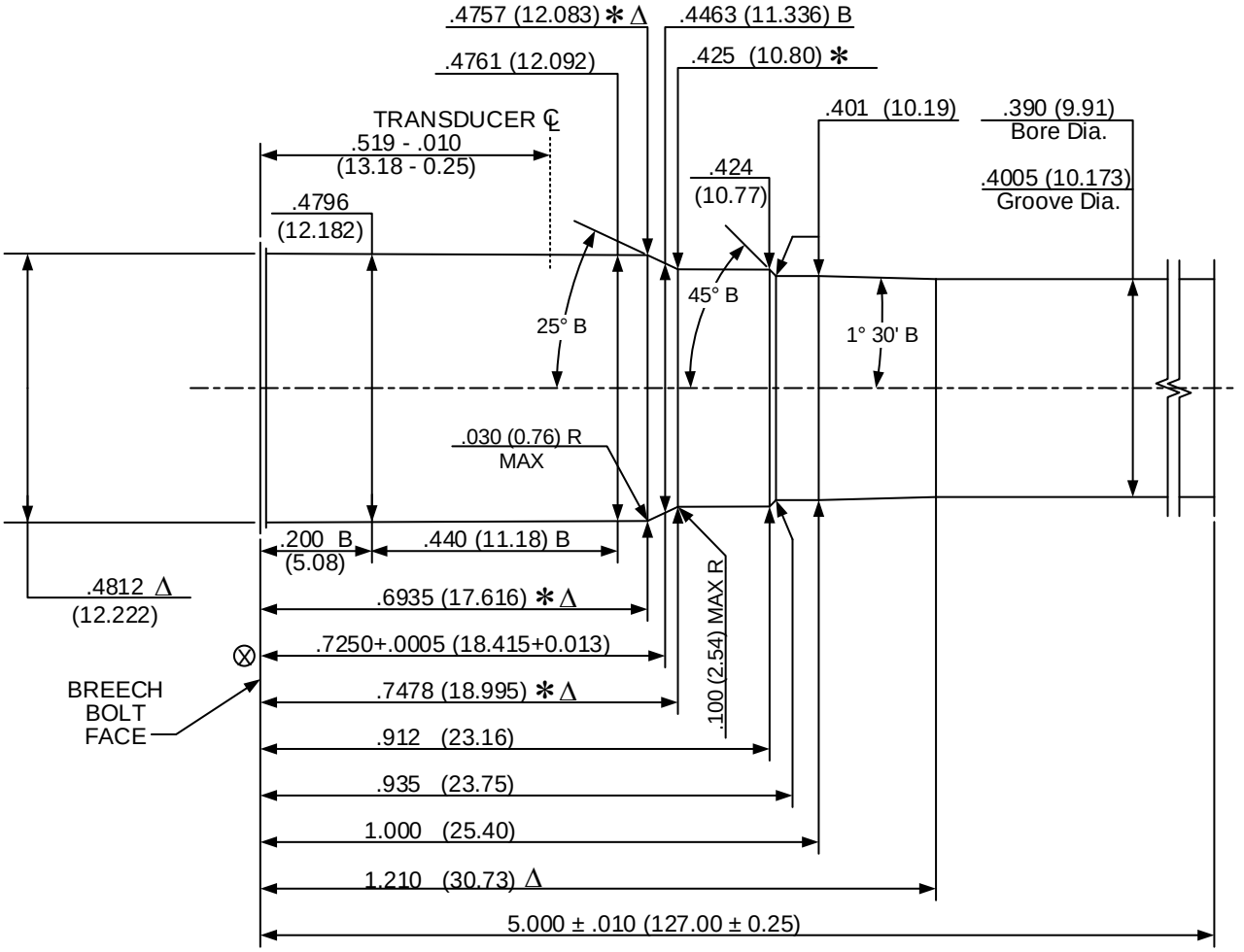

DO NOT SCALE FROM DRAWING

NUMBER OF GROOVES: 6
WIDTH OF GROOVES: .120 + .002 (3.05 + 0.05)
TWIST RATE: 16 (406.4) L.H.
DIAMETER OF PISTON HOLE: Crusher pressures not established
TRANSDUCER DIAMETER: .250 (6.35)

LAND AND GROOVE DIMENSIONS TO BE WITHIN TOLERANCES THROUGHOUT LENGTH OF BARREL.

UNLESS OTHERWISE NOTED, ALL DIAMETERS +.0005 (0.013) LENGTH TOLERANCE + .005 (0.13)

NOTE:

B = BASIC Δ = REFERENCE DIMENSION ⊗ = HEADSPACE DIMENSION
✻ DIMENSIONS ARE TO INTERSECTIONS OF LINES (XX.XX) = MILLIMETERS
ALL CALCULATIONS APPLY AT MAXIMUM MATERIAL CONDITION (MMC)

41 Remington Magnum V&P Test Barrel

Issued: 11/06/1979 — VENTED & SOLID — Revised: 08/11/2015

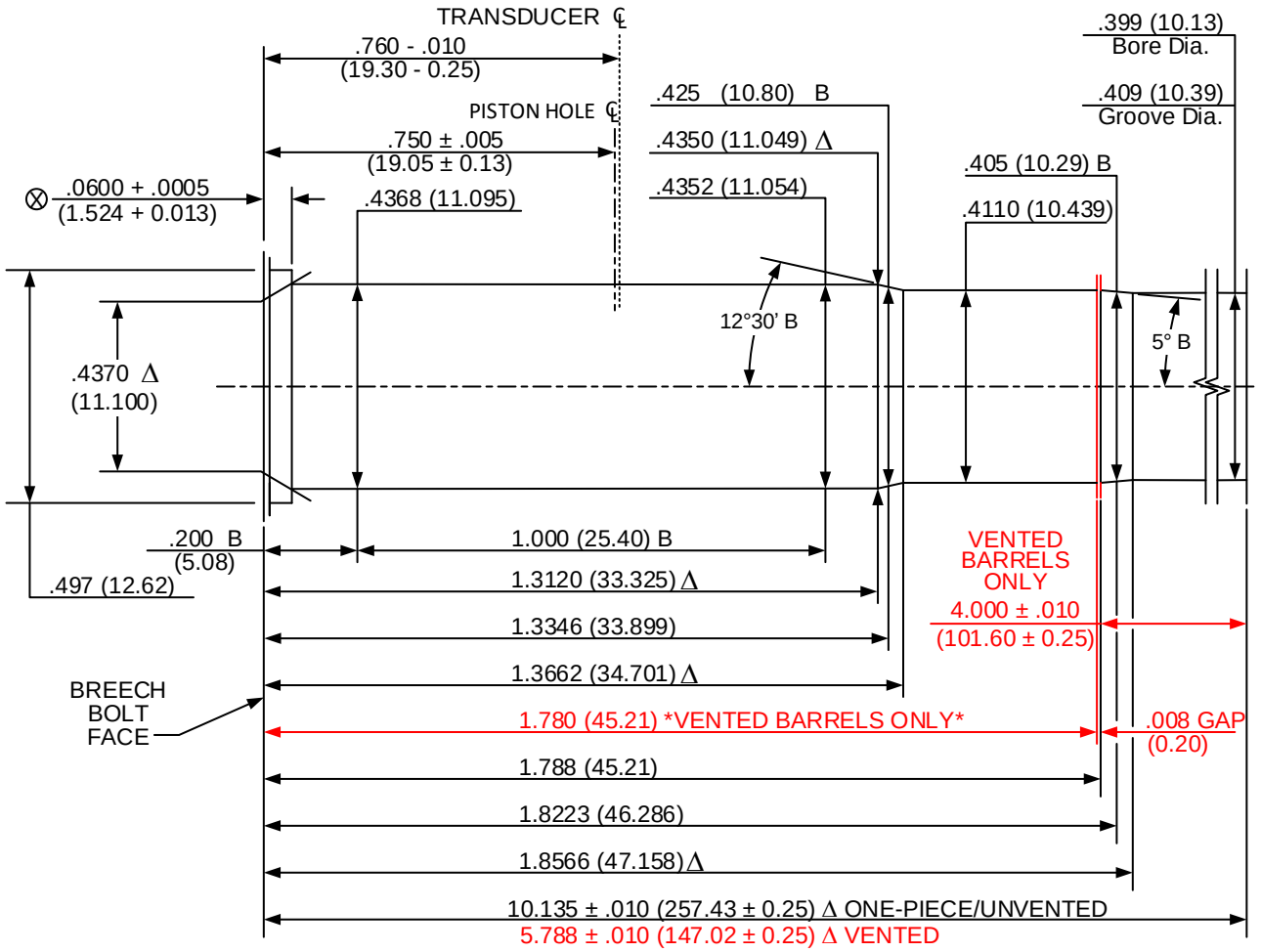

DO NOT SCALE FROM DRAWING

NUMBER OF GROOVES: 6
WIDTH OF GROOVES: .1054 + .0020 (2.677 + 0.051)
TWIST RATE: 18.75 (476.3) R.H.
DIAMETER OF PISTON HOLE: .206 (5.23)
TRANSDUCER DIAMETER: .250 (6.35)

LAND AND GROOVE DIMENSIONS TO BE WITHIN TOLERANCES THROUGHOUT LENGTH OF BARREL.

UNLESS OTHERWISE NOTED, ALL DIAMETERS +.0005 (0.013) LENGTH TOLERANCE + .005 (0.13)

NOTE:
B = BASIC Δ = REFERENCE DIMENSION ⊗ = HEADSPACE DIMENSION
∗ DIMENSIONS ARE TO INTERSECTIONS OF LINES (XX.XX) = MILLIMETERS
ALL CALCULATIONS APPLY AT MAXIMUM MATERIAL CONDITION (MMC)

44 Remington Magnum V&P Test Barrel

Issued: 11/06/1979 — VENTED & SOLID — Revised: 08/10/2015

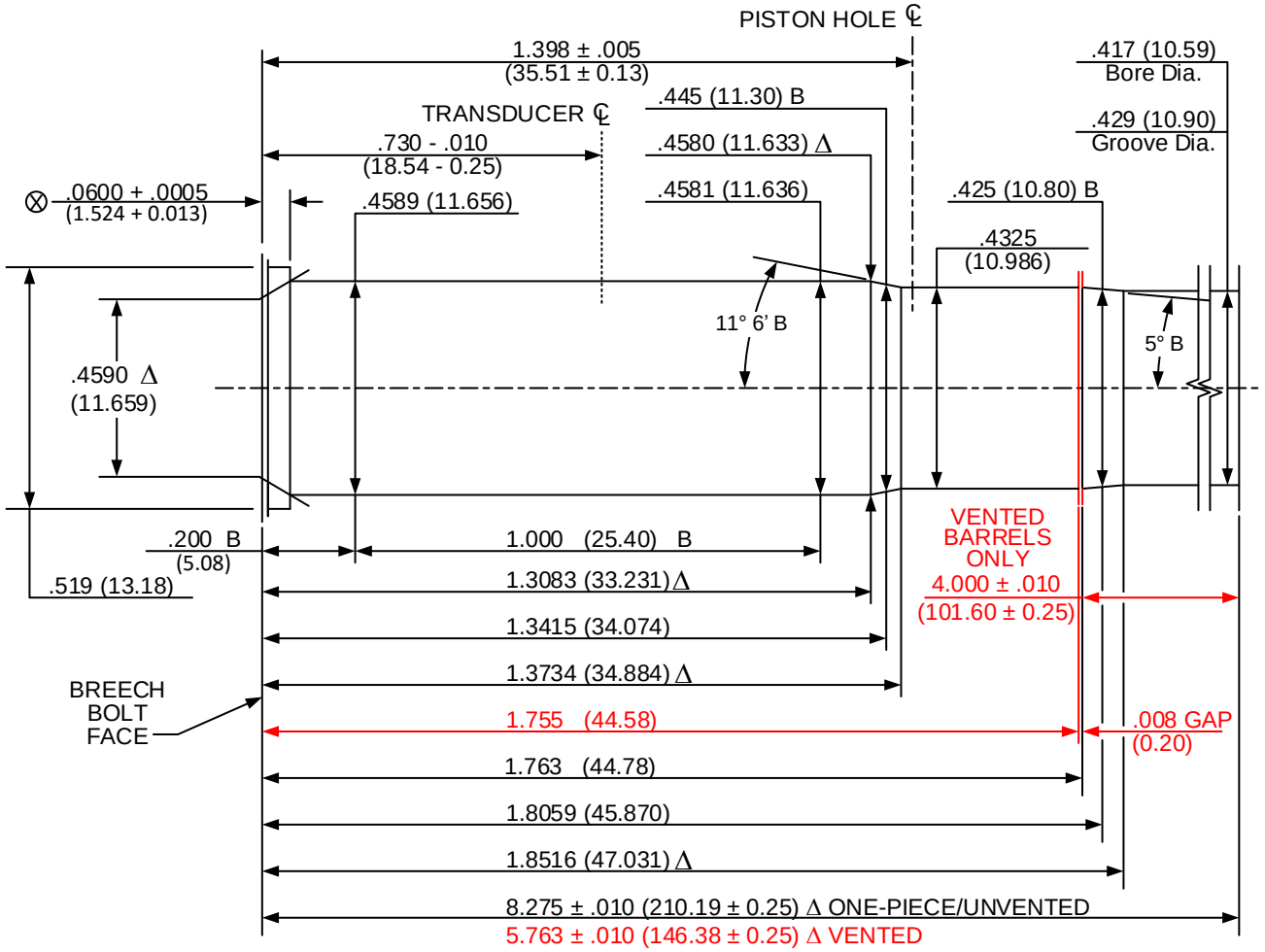

DO NOT SCALE FROM DRAWING

NUMBER OF GROOVES: 6
WIDTH OF GROOVES: .1076 + .0020 (2.733 + 0.051)
TWIST RATE: 20 (508) R.H.
DIAMETER OF PISTON HOLE: .206 (5.23)
TRANSDUCER DIAMETER: .250 (6.35)

LAND AND GROOVE DIMENSIONS TO BE WITHIN TOLERANCES THROUGHOUT LENGTH OF BARREL.

UNLESS OTHERWISE NOTED, ALL DIAMETERS +.0005 (0.013) LENGTH TOLERANCE + .005 (0.13)

NOTE:
B = BASIC Δ = REFERENCE DIMENSION ⊗ = HEADSPACE DIMENSION
∗ DIMENSIONS ARE TO INTERSECTIONS OF LINES (XX.XX) = MILLIMETERS
ALL CALCULATIONS APPLY AT MAXIMUM MATERIAL CONDITION (MMC)

44 Smith and Wesson Special V&P Test Barrel

Issued: 11/06/1979 — VENTED & SOLID — Revised: 08/10/2015

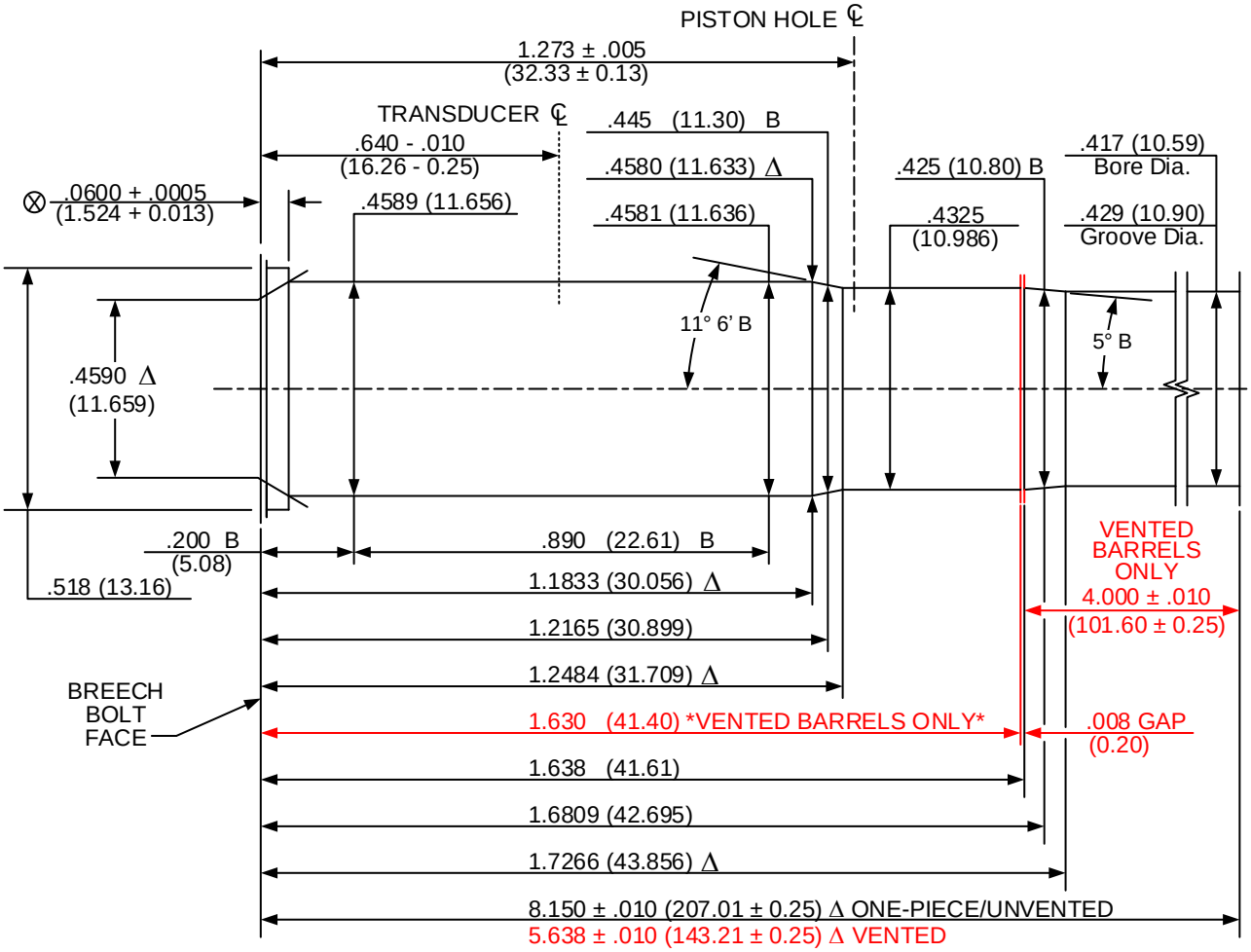

DO NOT SCALE FROM DRAWING

NUMBER OF GROOVES:	5
WIDTH OF GROOVES:	.1285 + .0020 (3.264 + 0.051)
TWIST RATE:	20 (508) R.H.
DIAMETER OF PISTON HOLE:	.206 (5.23)
TRANSDUCER DIAMETER:	.250 (6.35)

LAND AND GROOVE DIMENSIONS TO BE WITHIN TOLERANCES THROUGHOUT LENGTH OF BARREL.

UNLESS OTHERWISE NOTED, ALL DIAMETERS +.0005 (0.013) LENGTH TOLERANCE + .005 (0.13)

NOTE:

B = BASIC Δ = REFERENCE DIMENSION ⊗ = HEADSPACE DIMENSION
∗ DIMENSIONS ARE TO INTERSECTIONS OF LINES (XX.XX) = MILLIMETERS
ALL CALCULATIONS APPLY AT MAXIMUM MATERIAL CONDITION (MMC)

45 Automatic / 45 Automatic +P / 45 Automatic Match V&P Test Barrel

Issued: 11/06/1979 Revised: 08/10/2015

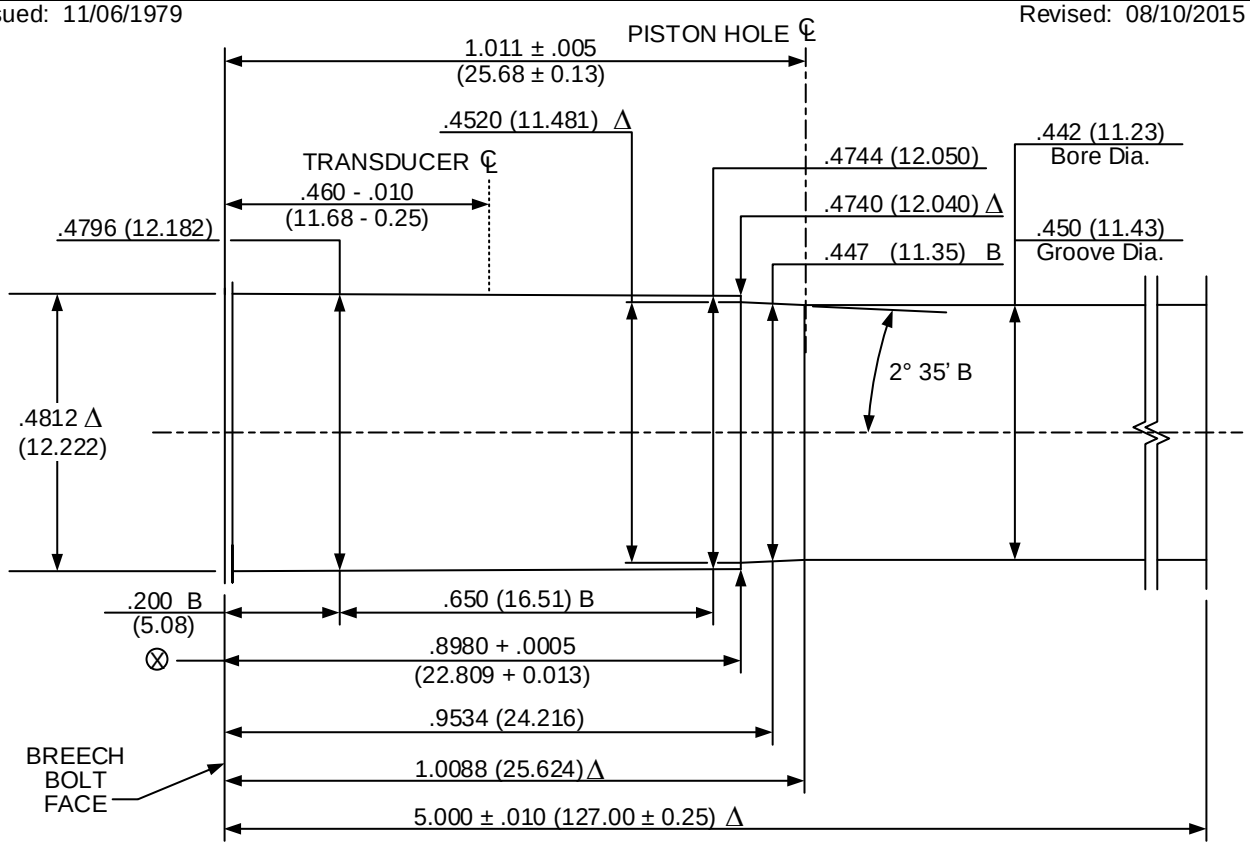

DO NOT SCALE FROM DRAWING

NUMBER OF GROOVES: 6
WIDTH OF GROOVES: .147 + .002 (3.73 + 0.050)
TWIST RATE: 16 (406.4) L.H.
DIAMETER OF PISTON HOLE: .206 (5.23)
TRANSDUCER DIAMETER: .250 (6.35)

LAND AND GROOVE DIMENSIONS TO BE WITHIN TOLERANCES THROUGHOUT LENGTH OF BARREL.

UNLESS OTHERWISE NOTED, ALL DIAMETERS +.0005 (0.013) LENGTH TOLERANCE + .005 (0.13)

NOTE:
B = BASIC Δ = REFERENCE DIMENSION ⊗ = HEADSPACE DIMENSION
* DIMENSIONS ARE TO INTERSECTIONS OF LINES (XX.XX) = MILLIMETERS
ALL CALCULATIONS APPLY AT MAXIMUM MATERIAL CONDITION (MMC)

45 Auto Rim V&P Test Barrel

Issued: 11/06/1979

VENTED & SOLID

Revised: 08/10/2015

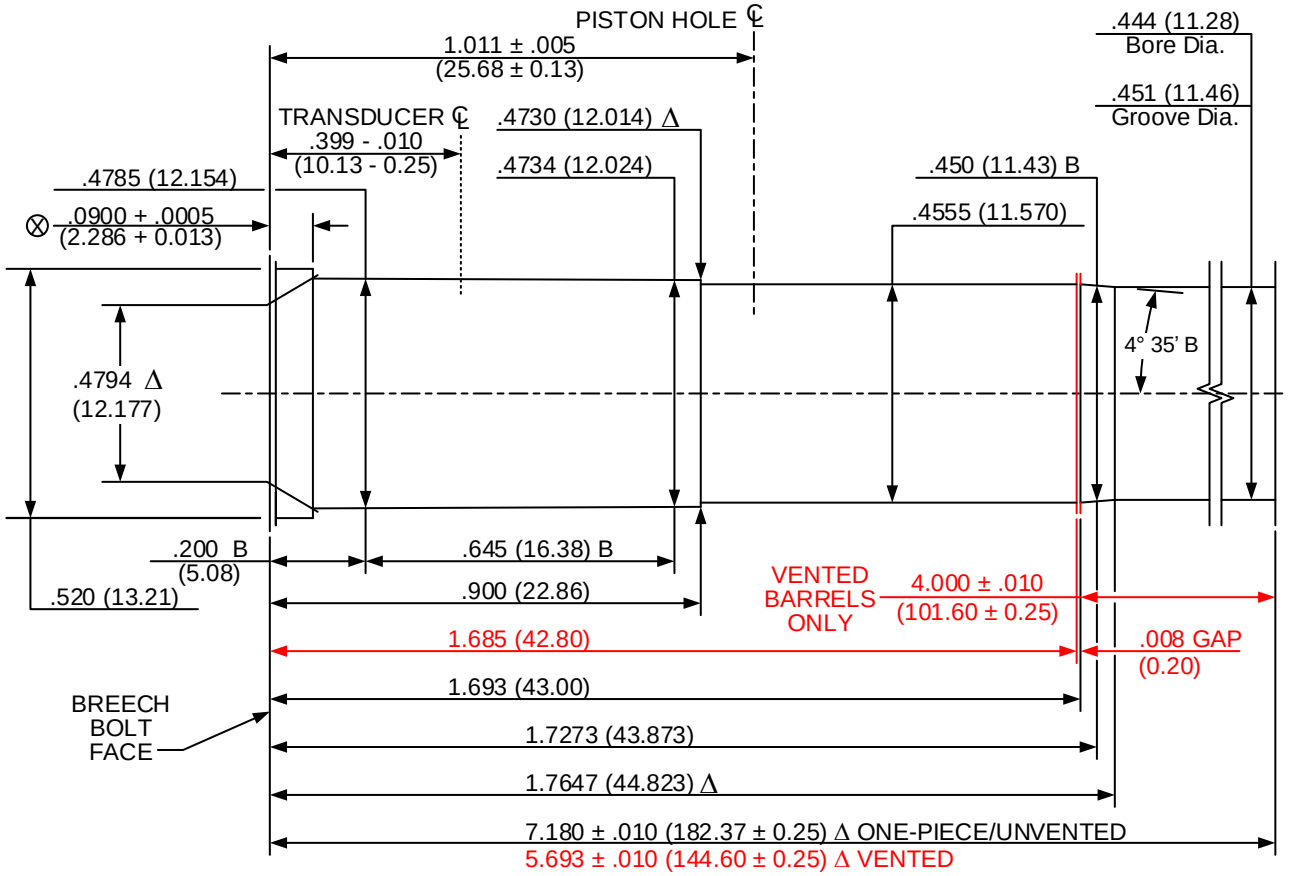

DO NOT SCALE FROM DRAWING

NUMBER OF GROOVES: 6
WIDTH OF GROOVES: .156 + .0020 (3.96 + 0.05)
TWIST RATE: 16.00 (406.4) L.H.
DIAMETER OF PISTON HOLE: .206 (5.23)
TRANSDUCER DIAMETER: .250 (6.35)

LAND AND GROOVE DIMENSIONS TO BE WITHIN TOLERANCES THROUGHOUT LENGTH OF BARREL.

UNLESS OTHERWISE NOTED, ALL DIAMETERS +.0005 (0.013) LENGTH TOLERANCE + .005 (0.13)

NOTE:
B = BASIC Δ = REFERENCE DIMENSION ⊗ = HEADSPACE DIMENSION
* DIMENSIONS ARE TO INTERSECTIONS OF LINES (XX.XX) = MILLIMETERS
ALL CALCULATIONS APPLY AT MAXIMUM MATERIAL CONDITION (MMC)

45 Colt V&P Test Barrel

Issued: 02/12/1987 — VENTED & SOLID — Revised: 08/10/2015

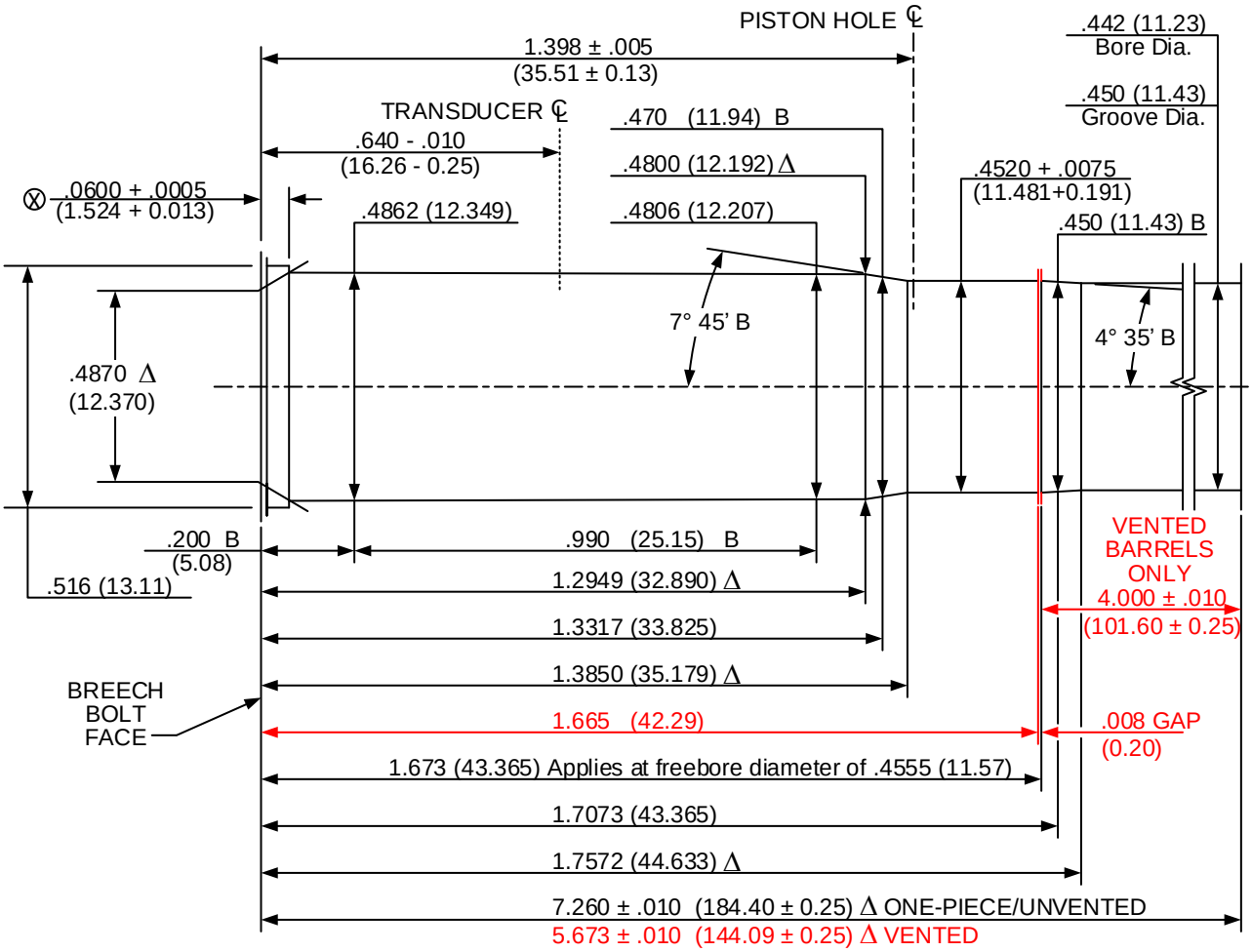

DO NOT SCALE FROM DRAWING

NUMBER OF GROOVES: 6
WIDTH OF GROOVES: .156 + .002 (3.96 + 0.05)
TWIST RATE: 16.00 (406.4) L.H.
DIAMETER OF PISTON HOLE: .206 (5.23)
TRANSDUCER DIAMETER: .250 (6.35)

LAND AND GROOVE DIMENSIONS TO BE WITHIN TOLERANCES THROUGHOUT LENGTH OF BARREL.

UNLESS OTHERWISE NOTED, ALL DIAMETERS +.0005 (0.013) LENGTH TOLERANCE + .005 (0.13)

NOTE:
B = BASIC Δ = REFERENCE DIMENSION Ⓧ= HEADSPACE DIMENSION
∗ DIMENSIONS ARE TO INTERSECTIONS OF LINES (XX.XX) = MILLIMETERS
ALL CALCULATIONS APPLY AT MAXIMUM MATERIAL CONDITION (MMC)

45 Glock Automatic Pistol V&P Test Barrel

Issued: 08/02/2003 Revised: 08/10/2015

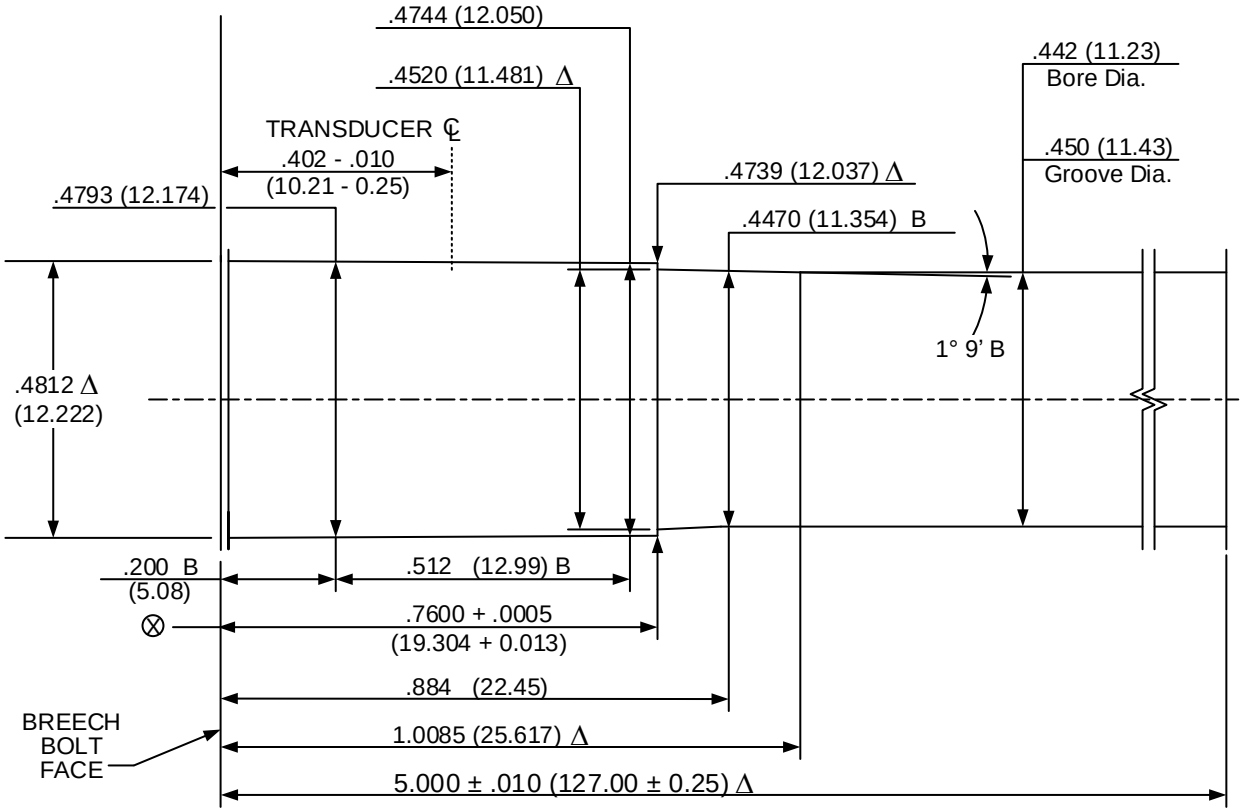

DO NOT SCALE FROM DRAWING

NUMBER OF GROOVES:	6
WIDTH OF GROOVES:	.147 + .002 (3.73 + 0.05)
TWIST RATE:	16.00 (406.4) L.H.
DIAMETER OF PISTON HOLE:	Crusher pressures not established
TRANSDUCER DIAMETER:	.250 (6.35)

LAND AND GROOVE DIMENSIONS TO BE WITHIN TOLERANCES THROUGHOUT LENGTH OF BARREL.

UNLESS OTHERWISE NOTED, ALL DIAMETERS +.0005 (0.013) LENGTH TOLERANCE + .005 (0.13)

NOTE:

B = BASIC Δ = REFERENCE DIMENSION ⊗ = HEADSPACE DIMENSION
∗ DIMENSIONS ARE TO INTERSECTIONS OF LINES (XX.XX) = MILLIMETERS
ALL CALCULATIONS APPLY AT MAXIMUM MATERIAL CONDITION (MMC)

45 Winchester Magnum V&P Test Barrel

Issued: 11/06/1979 Revised: 08/10/2015

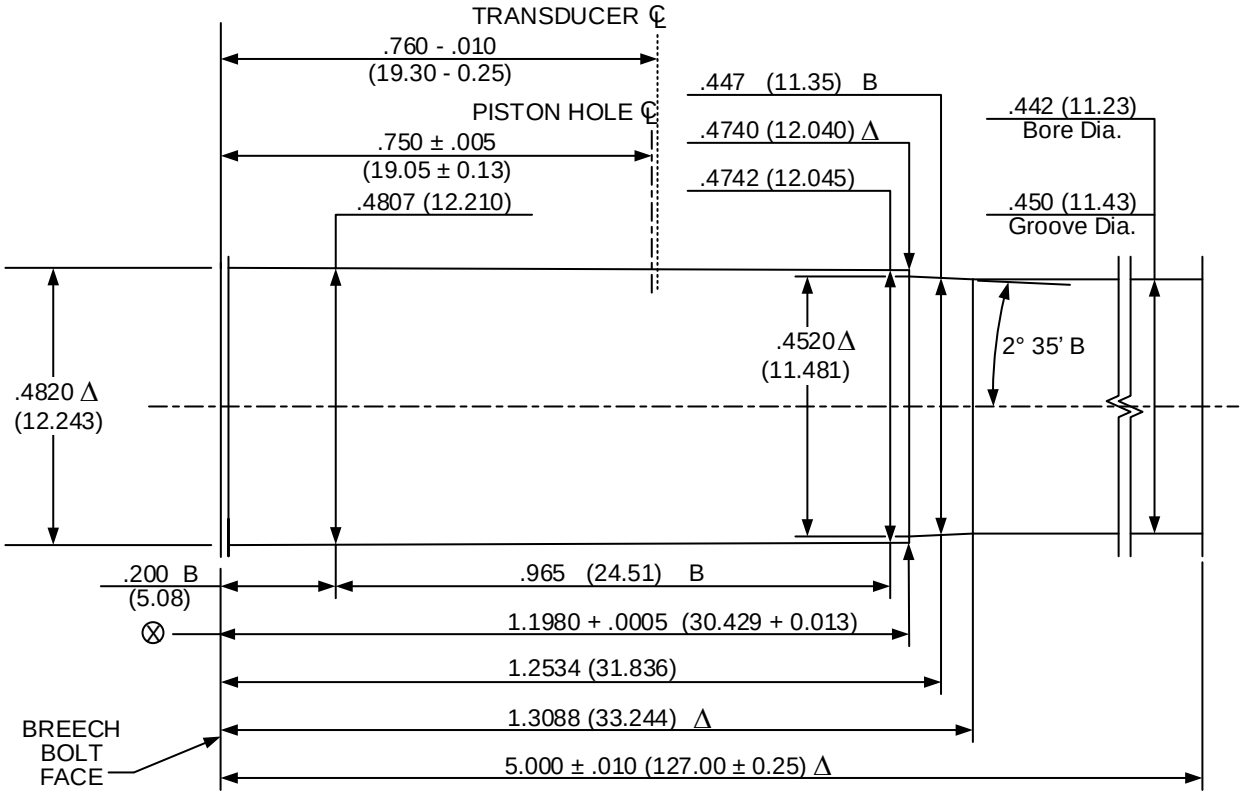

DO NOT SCALE FROM DRAWING

NUMBER OF GROOVES: 6
WIDTH OF GROOVES: .147 + .002 (3.73 + 0.050)
TWIST RATE: 16 (406.4) L.H.
DIAMETER OF PISTON HOLE: .206 (5.23)
TRANSDUCER DIAMETER: .250 (6.35)

LAND AND GROOVE DIMENSIONS TO BE WITHIN TOLERANCES THROUGHOUT LENGTH OF BARREL.

UNLESS OTHERWISE NOTED, ALL DIAMETERS +.0005 (0.013) LENGTH TOLERANCE + .005 (0.13)

NOTE:
B = BASIC Δ = REFERENCE DIMENSION ⊗ = HEADSPACE DIMENSION
* DIMENSIONS ARE TO INTERSECTIONS OF LINES (XX.XX) = MILLIMETERS
ALL CALCULATIONS APPLY AT MAXIMUM MATERIAL CONDITION (MMC)

454 Casull V&P Test Barrel

Issued: 06/04/1997

VENTED & SOLID

Revised: 08/15/2015

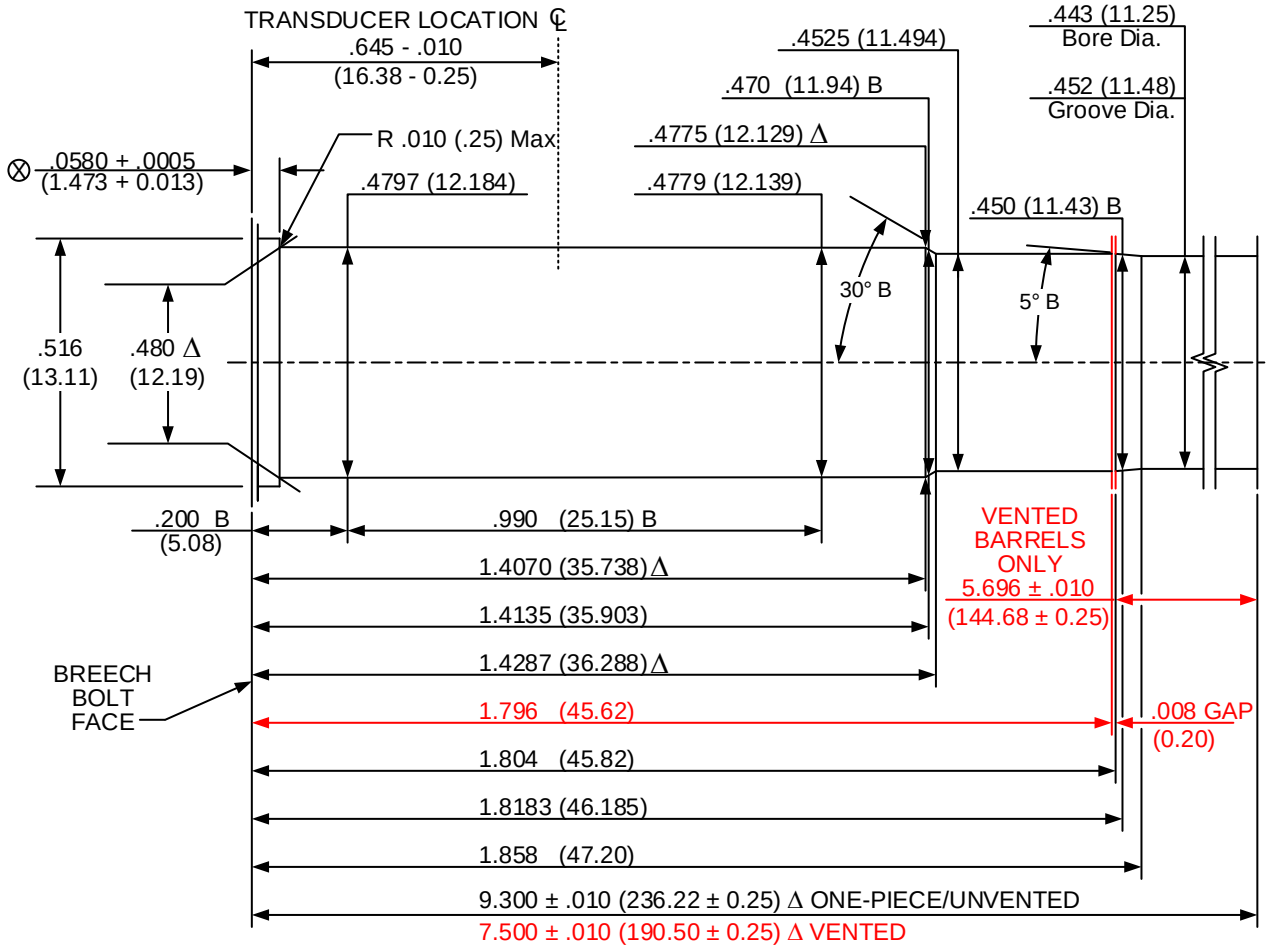

DO NOT SCALE FROM DRAWING

NUMBER OF GROOVES:	6
WIDTH OF GROOVES:	.160 + .002 (4.06 + 0.05)
TWIST RATE:	24.00 (609.6) R.H.
DIAMETER OF PISTON HOLE:	Crusher pressures not established
TRANSDUCER DIAMETER:	.250 (6.35)

LAND AND GROOVE DIMENSIONS TO BE WITHIN TOLERANCES THROUGHOUT LENGTH OF BARREL.

UNLESS OTHERWISE NOTED, ALL DIAMETERS +.0005 (0.013) LENGTH TOLERANCE + .005 (0.13)

NOTE:

B = BASIC Δ = REFERENCE DIMENSION ⊗ = HEADSPACE DIMENSION

* DIMENSIONS ARE TO INTERSECTIONS OF LINES (XX.XX) = MILLIMETERS

ALL CALCULATIONS APPLY AT MAXIMUM MATERIAL CONDITION (MMC)

460 S&W Magnum V&P Test Barrel

Issued: 02/08/2006

VENTED & SOLID

Revised: 08/08/2015

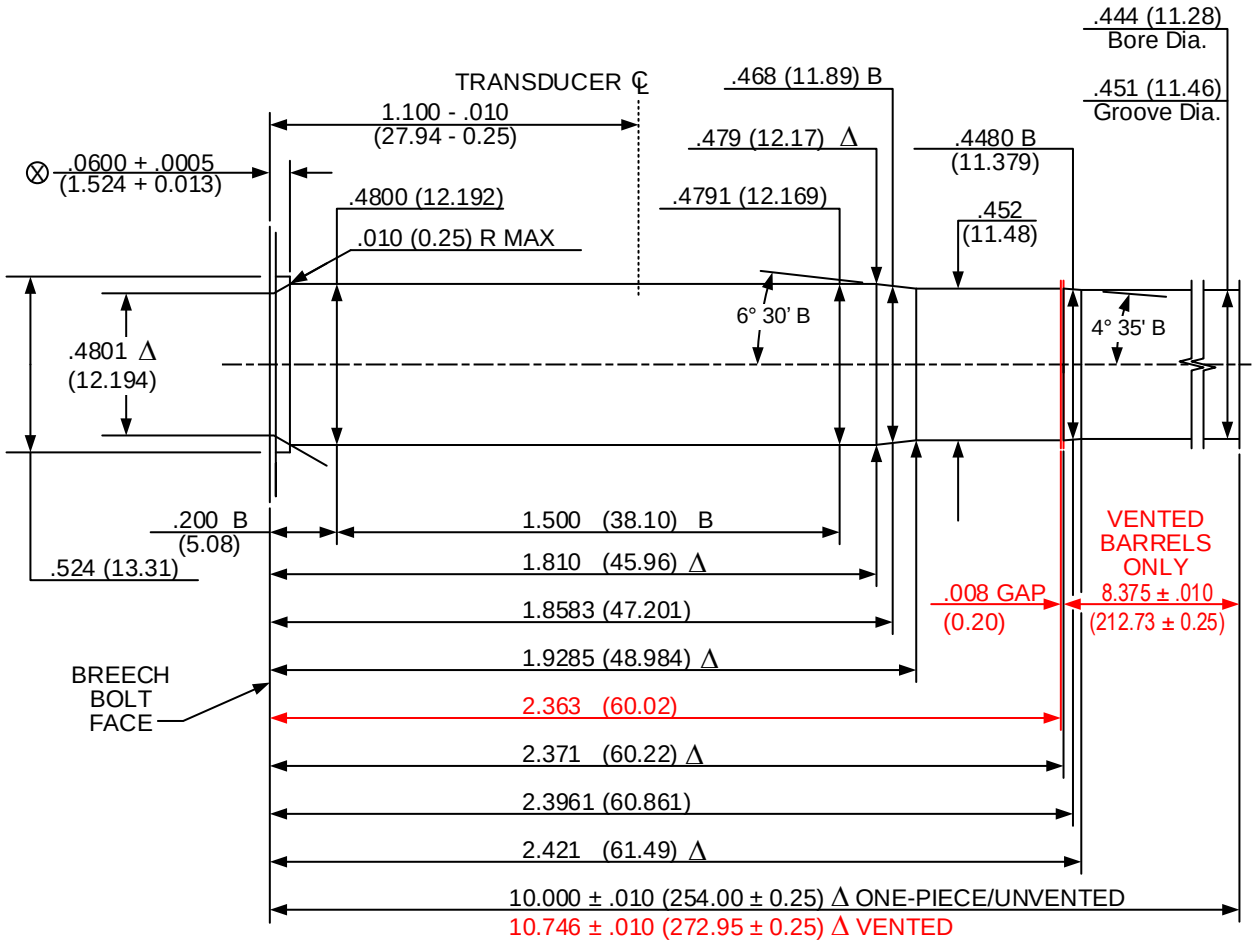

DO NOT SCALE FROM DRAWING

NUMBER OF GROOVES:	5
WIDTH OF GROOVES:	.144 + .003 (3.66 + 0.08)
TWIST RATE:	20.00 (508.0) R.H.
DIAMETER OF PISTON HOLE:	Crusher pressures not established
TRANSDUCER DIAMETER:	.250 (6.35)

LAND AND GROOVE DIMENSIONS TO BE WITHIN TOLERANCES THROUGHOUT LENGTH OF BARREL.

UNLESS OTHERWISE NOTED, ALL DIAMETERS +.0005 (0.013) LENGTH TOLERANCE + .005 (0.13)

NOTE:

B = BASIC Δ = REFERENCE DIMENSION ⊗ = HEADSPACE DIMENSION

∗ DIMENSIONS ARE TO INTERSECTIONS OF LINES (XX.XX) = MILLIMETERS

ALL CALCULATIONS APPLY AT MAXIMUM MATERIAL CONDITION (MMC)

475 Linebaugh V&P Test Barrel

Issued: 05/17/2000 — VENTED & SOLID — Revised: 08/15/2015

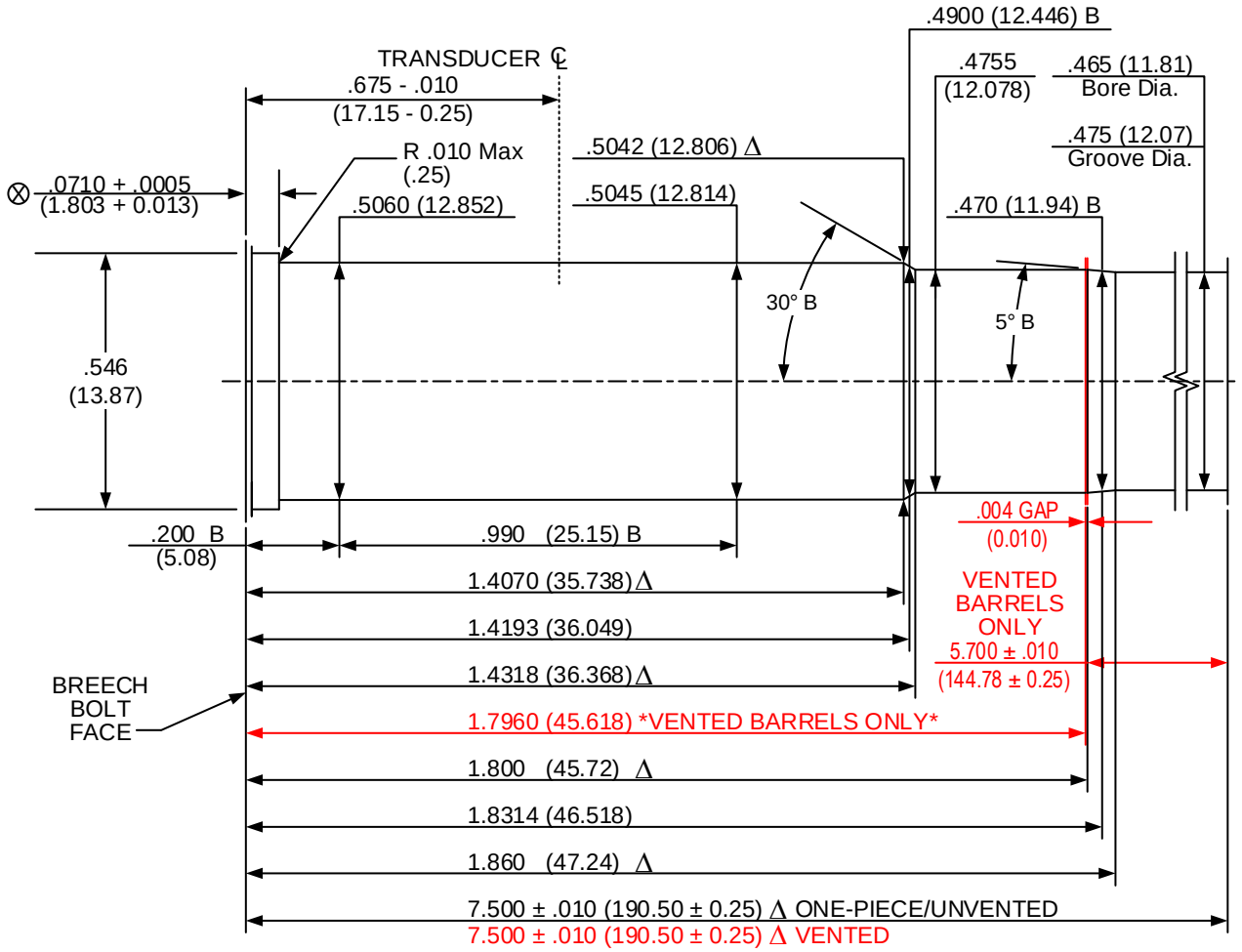

DO NOT SCALE FROM DRAWING

NUMBER OF GROOVES:	6
WIDTH OF GROOVES:	.160 + .002 (4.06 + 0.05)
TWIST RATE:	18.00 (457.2) R.H.
DIAMETER OF PISTON HOLE:	Crusher pressures not established
TRANSDUCER DIAMETER:	.250 (6.35)

LAND AND GROOVE DIMENSIONS TO BE WITHIN TOLERANCES THROUGHOUT LENGTH OF BARREL.

UNLESS OTHERWISE NOTED, ALL DIAMETERS +.0005 (0.013) LENGTH TOLERANCE + .005 (0.13)

NOTE:

B = BASIC Δ = REFERENCE DIMENSION ⊗ = HEADSPACE DIMENSION
* DIMENSIONS ARE TO INTERSECTIONS OF LINES (XX.XX) = MILLIMETERS
ALL CALCULATIONS APPLY AT MAXIMUM MATERIAL CONDITION (MMC)

480 Ruger V&P Test Barrel

Issued: 06/13/2001 — VENTED & SOLID — Revised: 08/15/2015

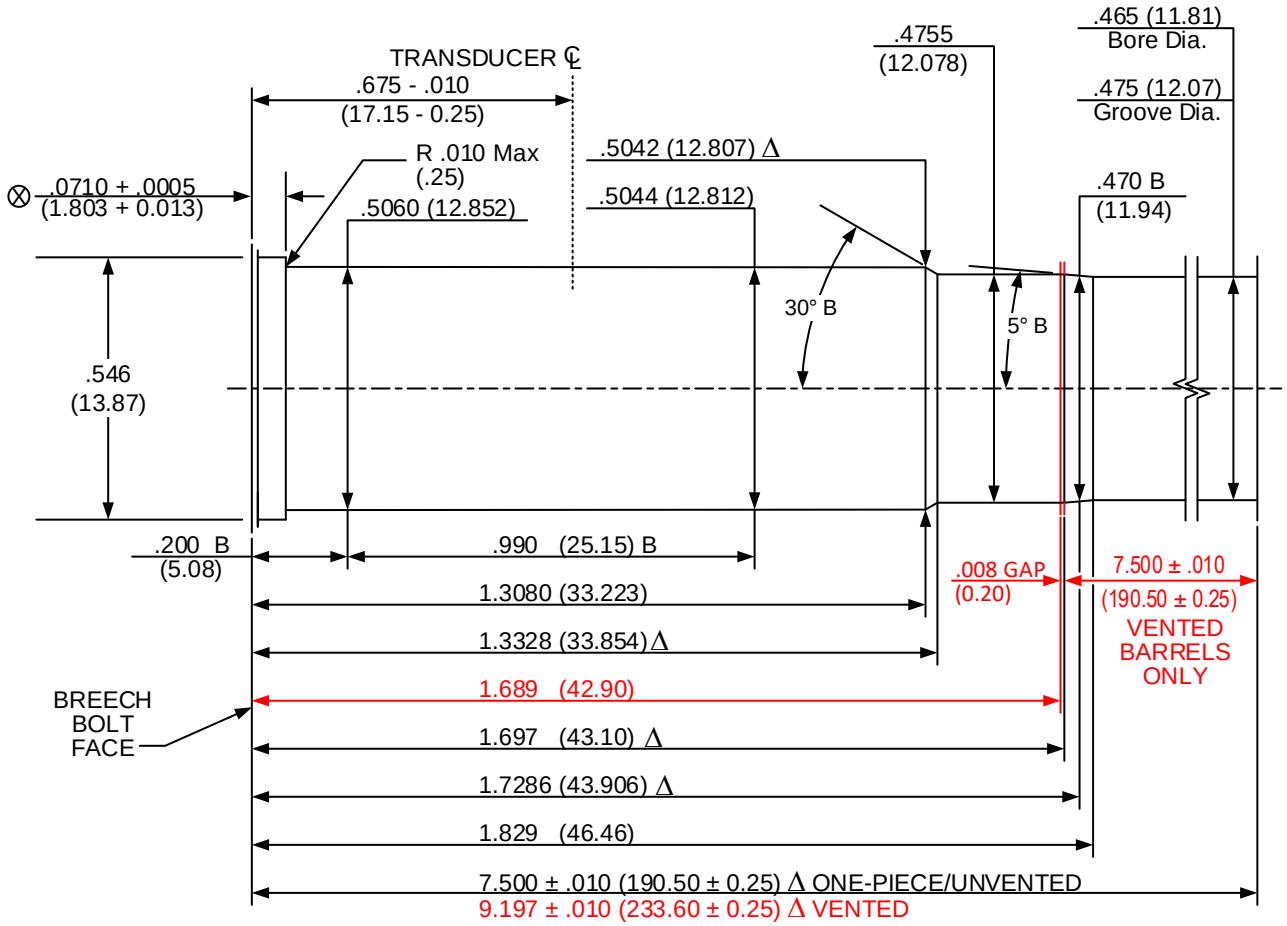

DO NOT SCALE FROM DRAWING

NUMBER OF GROOVES: 6
WIDTH OF GROOVES: .160 + .002 (4.06 + 0.05)
TWIST RATE: 18.00 (457.2) R.H.
DIAMETER OF PISTON HOLE: Crusher pressures not established
TRANSDUCER DIAMETER: .250 (6.35)

LAND AND GROOVE DIMENSIONS TO BE WITHIN TOLERANCES THROUGHOUT LENGTH OF BARREL.

UNLESS OTHERWISE NOTED, ALL DIAMETERS +.0005 (0.013) LENGTH TOLERANCE + .005 (0.13)

NOTE:
B = BASIC Δ = REFERENCE DIMENSION ⊗ = HEADSPACE DIMENSION
* DIMENSIONS ARE TO INTERSECTIONS OF LINES (XX.XX) = MILLIMETERS
ALL CALCULATIONS APPLY AT MAXIMUM MATERIAL CONDITION (MMC)

50 Action Express V&P Test Barrel

Issued: 06/03/1992 Revised: 08/11/2015

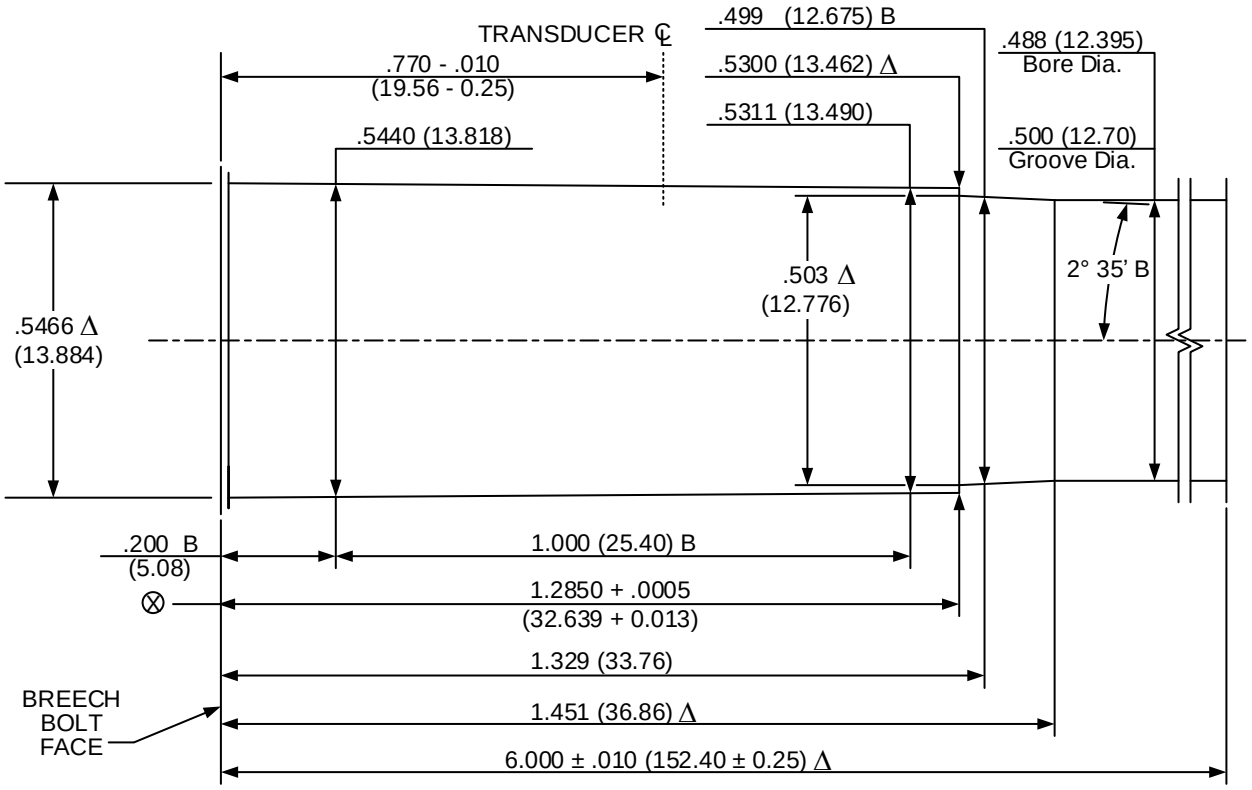

DO NOT SCALE FROM DRAWING

NUMBER OF GROOVES: 6
WIDTH OF GROOVES: .120 + .002 (3.05 + 0.050)
TWIST RATE: 20.00 (508.0) R.H.
DIAMETER OF PISTON HOLE: Crusher pressures not established
TRANSDUCER DIAMETER: .250 (6.35)

LAND AND GROOVE DIMENSIONS TO BE WITHIN TOLERANCES THROUGHOUT LENGTH OF BARREL.

UNLESS OTHERWISE NOTED, ALL DIAMETERS +.0005 (0.013) LENGTH TOLERANCE + .005 (0.13)

NOTE:
B = BASIC Δ = REFERENCE DIMENSION ⊗ = HEADSPACE DIMENSION
* DIMENSIONS ARE TO INTERSECTIONS OF LINES (XX.XX) = MILLIMETERS
ALL CALCULATIONS APPLY AT MAXIMUM MATERIAL CONDITION (MMC)

500 S&W Magnum V&P Test Barrel

Issued: 06/25/2003 — VENTED & SOLID — Revised: 08/15/2015

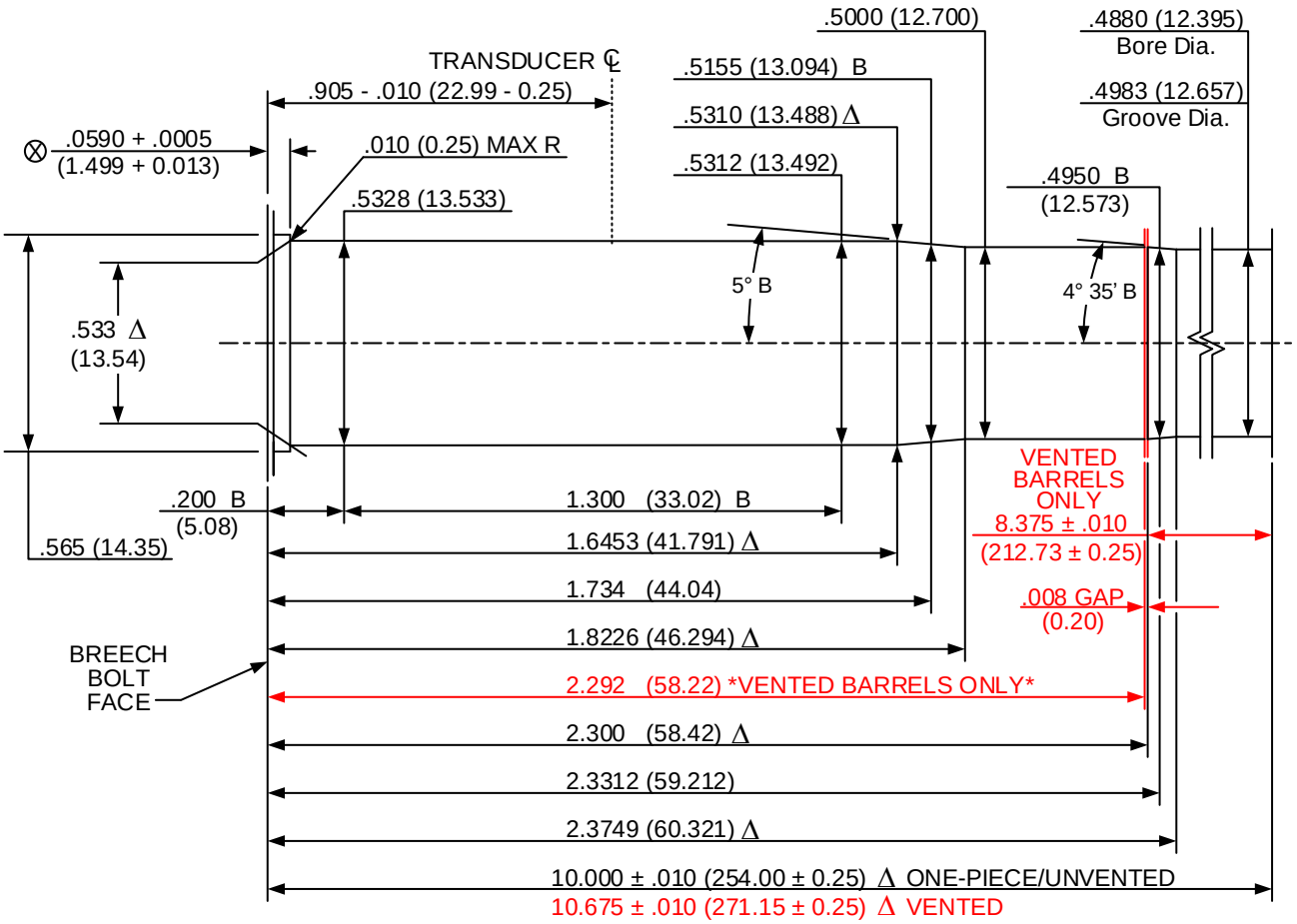

DO NOT SCALE FROM DRAWING

NUMBER OF GROOVES:	6
WIDTH OF GROOVES:	.130 + .002 (3.30 + 0.05)
TWIST RATE:	18.75 (476.3) R.H.
DIAMETER OF PISTON HOLE:	Crusher pressures not established
TRANSDUCER DIAMETER:	.250 (6.35)

LAND AND GROOVE DIMENSIONS TO BE WITHIN TOLERANCES THROUGHOUT LENGTH OF BARREL.

UNLESS OTHERWISE NOTED, ALL DIAMETERS +.0005 (0.013) LENGTH TOLERANCE + .005 (0.13)

NOTE:

B = BASIC Δ = REFERENCE DIMENSION ⊗ = HEADSPACE DIMENSION
* DIMENSIONS ARE TO INTERSECTIONS OF LINES (XX.XX) = MILLIMETERS
ALL CALCULATIONS APPLY AT MAXIMUM MATERIAL CONDITION (MMC)

500 Special V&P Test Barrel

Issued: 01/10/2007

VENTED & SOLID

Revised: 08/15/2015

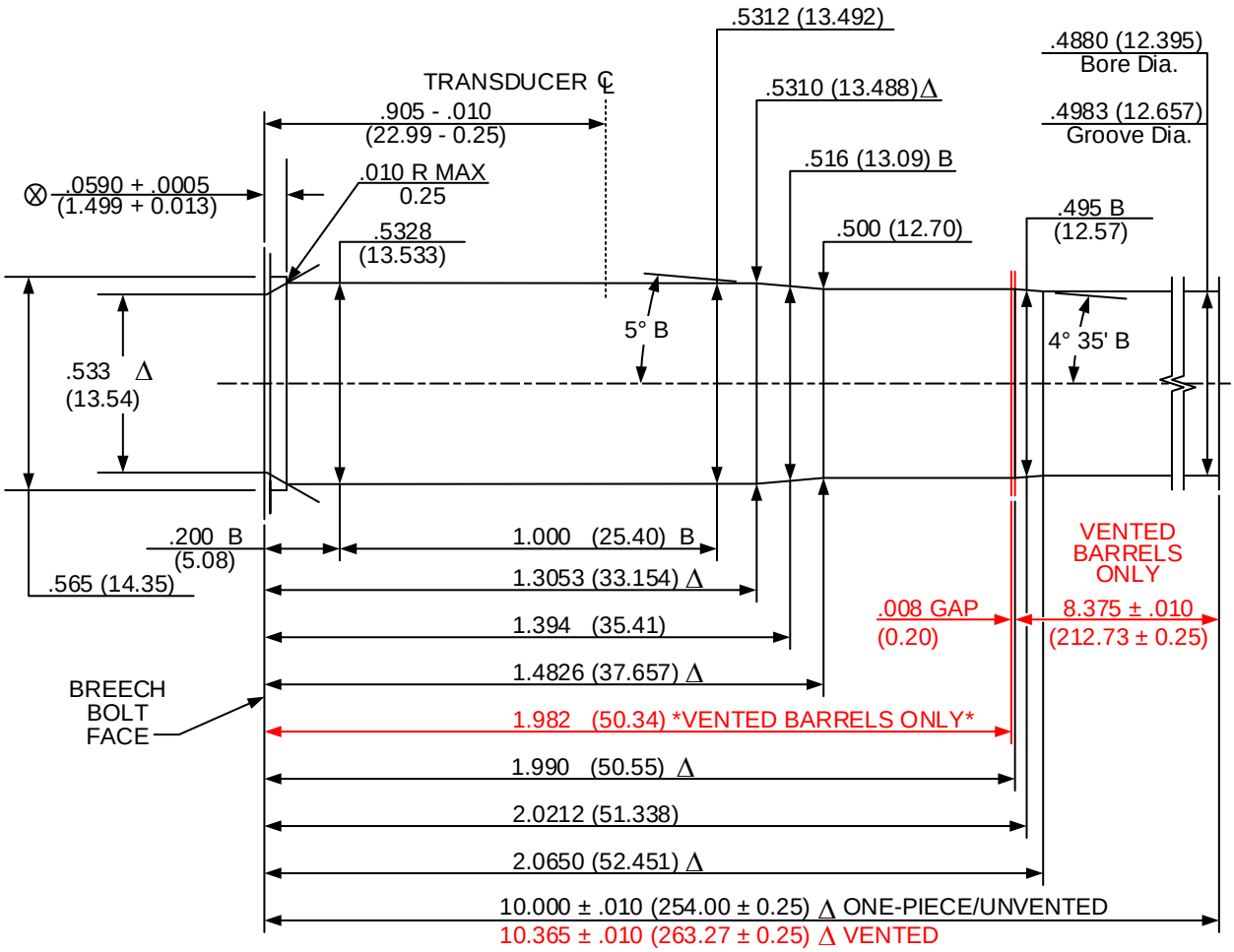

DO NOT SCALE FROM DRAWING

NUMBER OF GROOVES:	6
WIDTH OF GROOVES:	.130 + .002 (3.30 + 0.05)
TWIST RATE:	18.75 (476.3) R.H.
DIAMETER OF PISTON HOLE:	Crusher pressures not established
TRANSDUCER DIAMETER:	.250 (6.35)

LAND AND GROOVE DIMENSIONS TO BE WITHIN TOLERANCES THROUGHOUT LENGTH OF BARREL.

UNLESS OTHERWISE NOTED, ALL DIAMETERS +.0005 (0.013) LENGTH TOLERANCE + .005 (0.13)

NOTE:

B = BASIC Δ = REFERENCE DIMENSION ⊗ = HEADSPACE DIMENSION

* DIMENSIONS ARE TO INTERSECTIONS OF LINES (XX.XX) = MILLIMETERS

ALL CALCULATIONS APPLY AT MAXIMUM MATERIAL CONDITION (MMC)

DEFINITION AND PURPOSE

SAAMI Definitive Proof cartridges are cartridges commercially loaded by SAAMI member companies which develop pressure substantially exceeding those developed by normal service loads. The pressure levels are designed to assure gun safety when using ammunition loaded to service pressures in accordance with accepted American practices.

Proof cartridges are designed to stress firearms components which contain the cartridge in order to assure safety in the recommended use of the firearm during its service life.

It is important from the safety standpoint that Definitive Proof cartridges be used **only** for the proof of firearms. Adequate precaution must be taken to protect personnel performing firearms proof testing.

Definitive Proof cartridges for revolvers should be loaded with the heaviest bullet for the particular cartridge except where jacketed bullets not more than 25% lighter than the heaviest lead bullet are available. An appropriate powder which will stress the revolver cylinder should be used.

The supply of Definitive Proof cartridges will be the responsibility of the company that first introduced that particular caliber to the Institute. Definitive Proof Cartridges should be loaded with the heaviest bullet used at the time of introduction and the slowest powder which will meet the pressure values indicated for that particular cartridge to maintain effective pressure-distance relationship. Once established, the bullet weight for the proof load does not change unless the bullet becomes obsolete. All changes in Definitive Proof cartridges bullet weight must be approved by the Joint Technical Committee.

PROOF PRESSURE INTERPRETATION

The following specifications define the proof loads based on tests fired in standard test barrels with the ammunition at a temperature of 60°-80°F (15.6°-26.7°C). Tests shall be in accordance with the procedures and equipment shown in Sections II and III of this Standard.

Pressure values are given on the following pages in terms of minimum and maximum averages and extreme variations for 10-round tests in standard test barrels.

The Standard Deviations for Definitive Proof Cartridges are the same as the Standard Deviations for service loads.

The minimum and maximum average Definitive Proof Pressures are computed as follows:

- The Minimum Average Definitive Proof Pressure is calculated by multiplying the Maximum Probable Lot Mean (MPLM) service pressure by the appropriate proof multiplier listed in Table 1 and rounding **UP** to the nearest multiple of 500 psi.
- The Maximum Average Definitive Proof Pressure is calculated by multiplying the Maximum Probable Lot Mean (MPLM) service pressure by the appropriate proof multiplier listed in Table 1 and rounding **DOWN** to the nearest multiple of 500 psi.
- The Maximum Proof Extreme Variation (EV) is calculated by multiplying the Proof Standard Deviation (which in the case of Centerfire Pistol & Revolver is equal to the Service Standard Deviation) by the constant 5.16[(5)]) and rounding **UP** to the next 100 psi.
- The Minimum Proof Individual (MPI) pressure is positioned three standard deviations (proof) below the Minimum Average Definitive Proof Pressure, with the calculated value being rounded **DOWN** to the next multiple of 100 psi.

Table 1

When Maximum Average Pressure is	Definitive Proof Pressure Multiplier	
	Minimum	**Maximum**
15,000 psi or less	140%	155%
15,100 psi to 18,000 psi	135%	150%
18,100 psi to 21,000 psi	130%	145%
21,100 psi and greater	130%	140%

Example:

Cartridge: 380 Auto MPLM Pressure = 22,200 psi S.D. = 1,075 psi

1. Min. Avg. Proof Pressure = Maximum Probable Lot Mean Pressure x 1.30
   i.e.: 22,200 psi x 1.30 = 28,860 psi rounded **up** to nearest 500 psi = 29,000 psi
2. Max. Avg. Proof Pressure = Maximum Probable Lot Mean Pressure x 1.40
   i.e.; 22,200 psi x 1.40 = 31,080 psi rounded **down** to nearest 500 psi = 31,000 psi

[5] The Maximum Proof Pressure EV is a statistic derived from knowledge of the population standard deviation. Applying table figures from Relative Range Tables (Biometrika Tables for Statisticians), we calculate the maximum EV, or *Range*, equal to the population S.D. times the table constant 5.16 (for a sample of 10 at 99.0% confidence level).

3. Max. Proof E.V. = Service Standard Deviation x 5.16.
   i.e.: 1,075 psi x 5.16 = 5,547 psi rounded **up** to next 100 psi = 5,600 psi.

4. Minimum Proof Individual = Min. Avg. Proof Pressure – (3 x $\sigma_{(PROOF)}$)
   i.e., 29,000 psi – (3 x 1,075 psi) = 25,775 psi rounded **down** to next 100 psi = 25,700 psi.

PROOF PRESSURE DATA - CRUSHER

Cartridge	Bullet Weight (grains)	SERVICE Maximum Average Pressure (CUP/100)	Pressure Values of Proof Cartridges[1]		
			Minimum Average (CUP/100)	Maximum Average (CUP/100)	Maximum E.V. (CUP/100)
9mm Luger	**Obsolete, use 9mm Luger +P proof loads**				
9mm Luger +P	115	N/E[2]	N/E	N/E	N/E
9x18 Makarov	95	N/E	N/E	N/E	N/E
9x23 Winchester	125	N/E	N/E	N/E	N/E
10mm Automatic	200	N/E	N/E	N/E	N/E
221 Remington Fireball	50	520	700	750	135
25 Automatic	50	180	255	275	47
25 North American Arms	35	N/E	N/E	N/E	N/E
30 Luger (7.65mm)	93	280	380	400	73
32 Automatic	71	150	220	240	39
32 H&R Magnum	95	210	285	310	55
32 North American Arms	60	N/E	N/E	N/E	N/E
32 Short Colt	80	130	190	205	34
32 Smith &Wesson	88	120	175	190	31
32 Smith &Wesson Long	98	120	175	190	31
327 Federal Magnum	115	N/E	N/E	N/E	N/E
356 TSW	147	N/E	N/E	N/E	N/E
357 Magnum	158	450	605	645	117
357 Sig	125	N/E	N/E	N/E	N/E
38 Automatic	130	230	310	330	60

[1] Based on sample size η=10.
[2] N/E = Not Established.

Cartridge	Bullet Weight (grains)	SERVICE Maximum Average Pressure (CUP/100)	Pressure Values of Proof Cartridges[1] Minimum Average (CUP/100)	Maximum Average (CUP/100)	Maximum E.V. (CUP/100)
38 Smith &Wesson	146	130	190	205	34
38 Special	**Obsolete, use 38 Special +P proof loads**				
38 Special Match	No specific proof load; use 38 Special +P proof loads				
38 Special +P	158	200	270	295	52
38 Super Automatic +P	130	330	445	475	86
380 Automatic	95	170	240	260	44
40 Smith & Wesson	180	N/E[2]	N/E	N/E	N/E
400 Cor-Bon	165	N/E	N/E	N/E	N/E
41 Remington Magnum	210	400	540	575	104
44 Remington Magnum	240	400	540	575	104
44 S&W Special	246	140	205	220	37
45 Automatic	**Obsolete, use 45 Automatic +P proof loads**				
45 Automatic Match	No specific proof load; use 45 Automatic +P proof loads				
45 Automatic +P	185	N/E	N/E	N/E	N/E
45 Auto Rim	230	150	220	240	39
45 Colt	255	140	205	220	37
45 Glock Automatic Pistol	200	N/E	N/E	N/E	N/E
45 Winchester Magnum	230	400	540	575	104
454 Casull	300	N/E	N/E	N/E	N/E
460 S&W Mag	300	N/E	N/E	N/E	N/E
475 Linebaugh	400	N/E	N/E	N/E	N/E
480 Ruger	325	N/E	N/E	N/E	N/E
50 Action Express	325	N/E	N/E	N/E	N/E
500 S&W Magnum	440	N/E	N/E	N/E	N/E
500 Special	350	N/E	N/E	N/E	N/E

[1] Based on sample size η=10.
[2] N/E = Not Established.

PROOF PRESSURE DATA - TRANSDUCER

Cartridge	Bullet Weight (grains)	SERVICE Maximum Average Pressure (psi/100)	Pressure Values of Proof Cartridges[1]		
			Minimum Average (psi/100)	Maximum Average (psi/100)	Maximum E.V. (psi/100)
9mm Luger	**Obsolete, use 9mm Luger +P proof loads**				
9mm Luger +P	115	385	520	555	100
9x18 Makarov	95	241	325	345	63
9x23 Winchester	125	550	740	790	142
10mm Automatic	200	375	505	540	97
221 Remington Fireball	50	600	805	865	155
25 Automatic	50	250	340	360	65
25 North American Arms	35	239	325	345	62
30 Luger (7.65mm)	93	N/E[2]	N/E	N/E	N/E
32 Automatic	71	205	275	305	53
32 H&R Magnum	95	N/E	N/E	N/E	N/E
32 North American Arms	60	239	325	345	62
32 Short Colt	80	N/E	N/E	N/E	N/E
32 Smith &Wesson	88	170	240	260	44
32 Smith &Wesson Long	98	150	220	240	39
327 Federal Magnum	115	450	605	645	117
356 TSW	147	500	675	720	129
357 Magnum	158	350	470	505	91
357 Sig	125	400	540	575	104
38 Automatic	130	265	355	380	69

[1] Based on sample size η=10.
[2] N/E = Not Established.

Cartridge	Bullet Weight (grains)	SERVICE Maximum Average Pressure (psi/100)	Pressure Values of Proof Cartridges[3] Minimum Average (psi/100)	Maximum Average (psi/100)	Maximum E.V. (psi/100)
38 Smith &Wesson	146	145	210	230	38
38 Special	**Obsolete, use 38 Special +P proof loads**				
38 Special Match	No specific proof load; use 38 Special +P proof loads				
38 Special +P	158	200	270	295	52
38 Super Automatic +P	130	365	495	525	95
380 Automatic	95	215	290	310	56
40 Smith & Wesson	180	350	470	505	91
400 Cor-Bon	165	350	470	505	91
41 Remington Magnum	210	360	485	515	93
44 Remington Magnum	240	360	485	515	93
44 S&W Special	246	155	220	240	40
45 Automatic	**Obsolete, use 45 Automatic +P proof loads**				
45 Automatic Match	No specific proof load; use 45 Automatic +P proof loads				
45 Automatic +P	185	230	310	330	60
45 Auto Rim	230	N/E[4]	N/E	N/E	N/E
45 Colt	255	140	205	220	37
45 Glock Automatic Pistol	200	230	310	330	60
45 Winchester Magnum	230	415	560	595	108
454 Casull	300	650	875	935	168
460 S&W Mag	300	650	875	935	168
475 Linebaugh	400	500	675	720	129
480 Ruger	325	480	645	690	124
50 Action Express	325	350	470	505	91
500 S&W Magnum	440	600	805	865	155
500 Special	350	360	485	515	93

[3] Based on sample size η=10.
[4] N/E = Not Established.

PROOF LOAD SUPPLY

NOTE: Refer to Section III – page 130, ***Supplier Contact Information***, for detailed information on contacting the manufacturers of listed products and the SAAMI Technical Office.

Centerfire pistol and revolver Definitive Proof Loads should be used for one purpose only: the proof testing of Centerfire pistols and revolvers.

A list of current suppliers may be obtained from the SAAMI Technical Office.

PROOF CARTRIDGE IDENTIFICATION

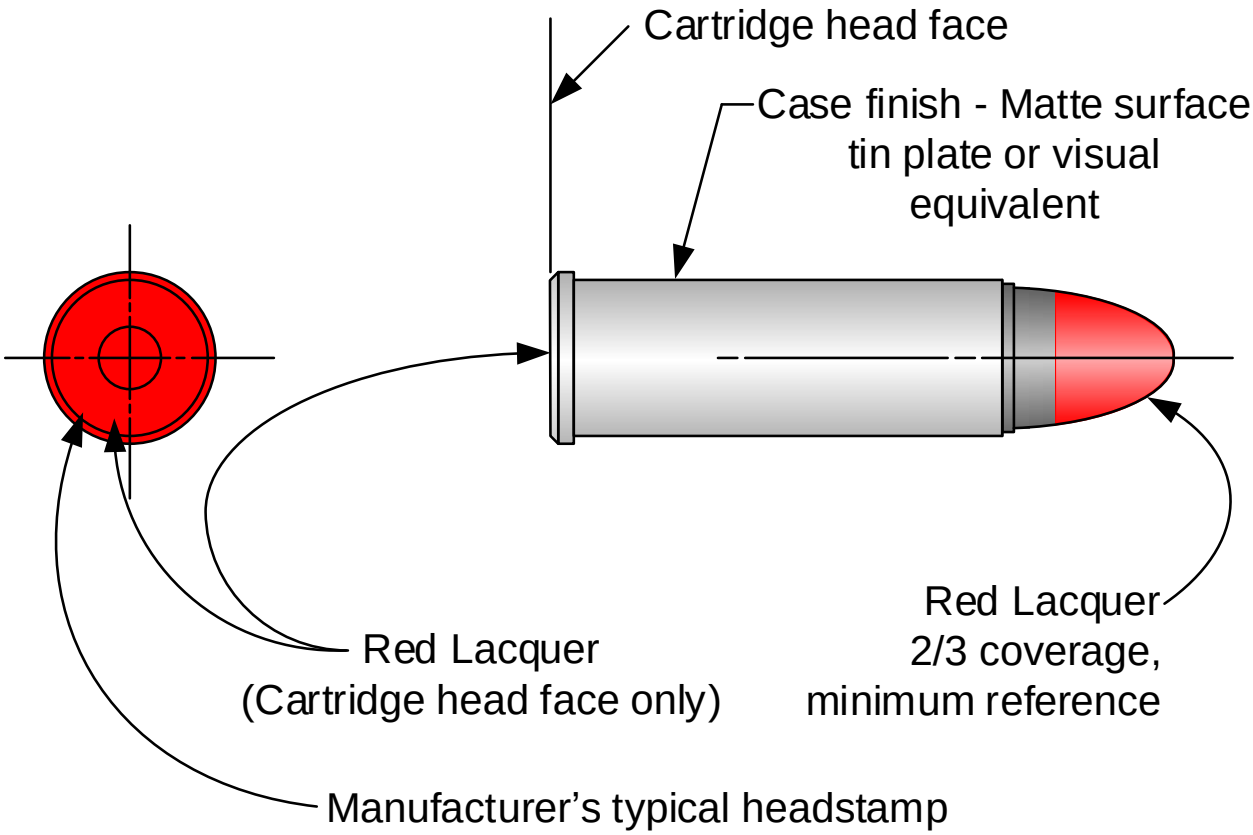

NOTE:

(XX.XX) = Millimeters

DEFINITIVE PROOF PACKAGE IDENTIFICATION

HIGH PRESSURE PROOF LOADS

For Gun Manufacturers' Proof Test Use Only: Fire only from fixed rest with operator properly protected from injury should the firearm be damaged. Purchaser should restrict proof loads to manufacturing premises. To dispose of proof loads, contact producer for instructions.

DO NOT reload or dispose of fired proof shells in a manner that may make them available for reloading. **Failure to follow the foregoing can result in a personal injury.**

Centerfire proof loads are identified by a tin-plated case (or visual equivalent) with red lacquer on the bullet and case head face.

For consistent results, proof loads should be stored for 2 weeks at 70°F± 5° (21.1° ± 2.8°C), and 60% relative humidity before use.

"WARNING: KEEP OUT OF REACH OF CHILDREN"

(Red lettering on white background)